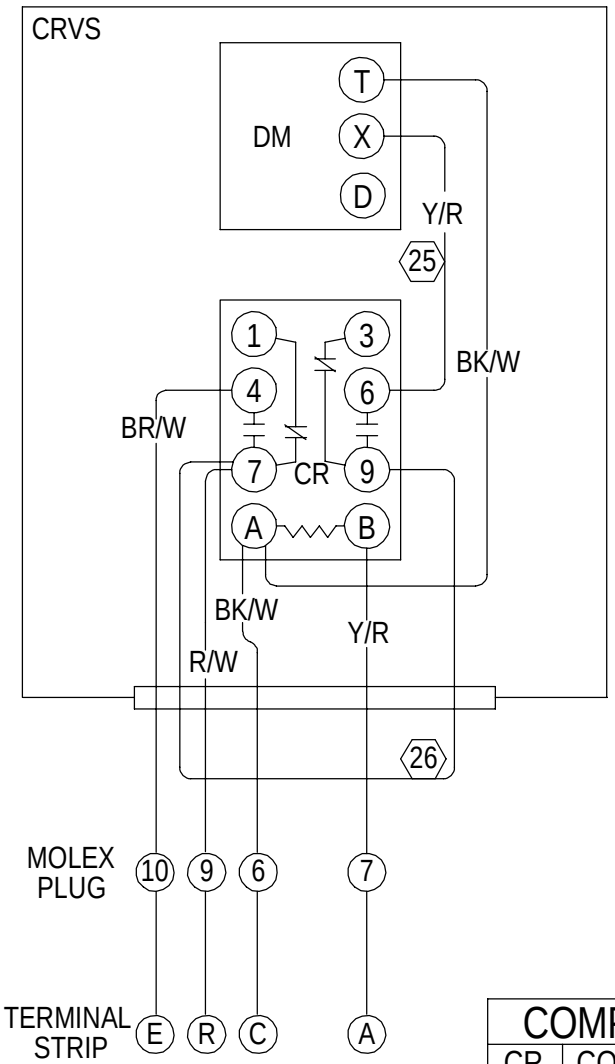

COLOR CODE	
BLACK	BK
BROWN	BR
RED	R
ORANGE	O
YELLOW	Y
GREEN	G
BLUE	BL
WHITE	W

COMPONENT CODE	
CR	CONTROL RELAY
DM	DAMPER MOTOR

4056-224 B