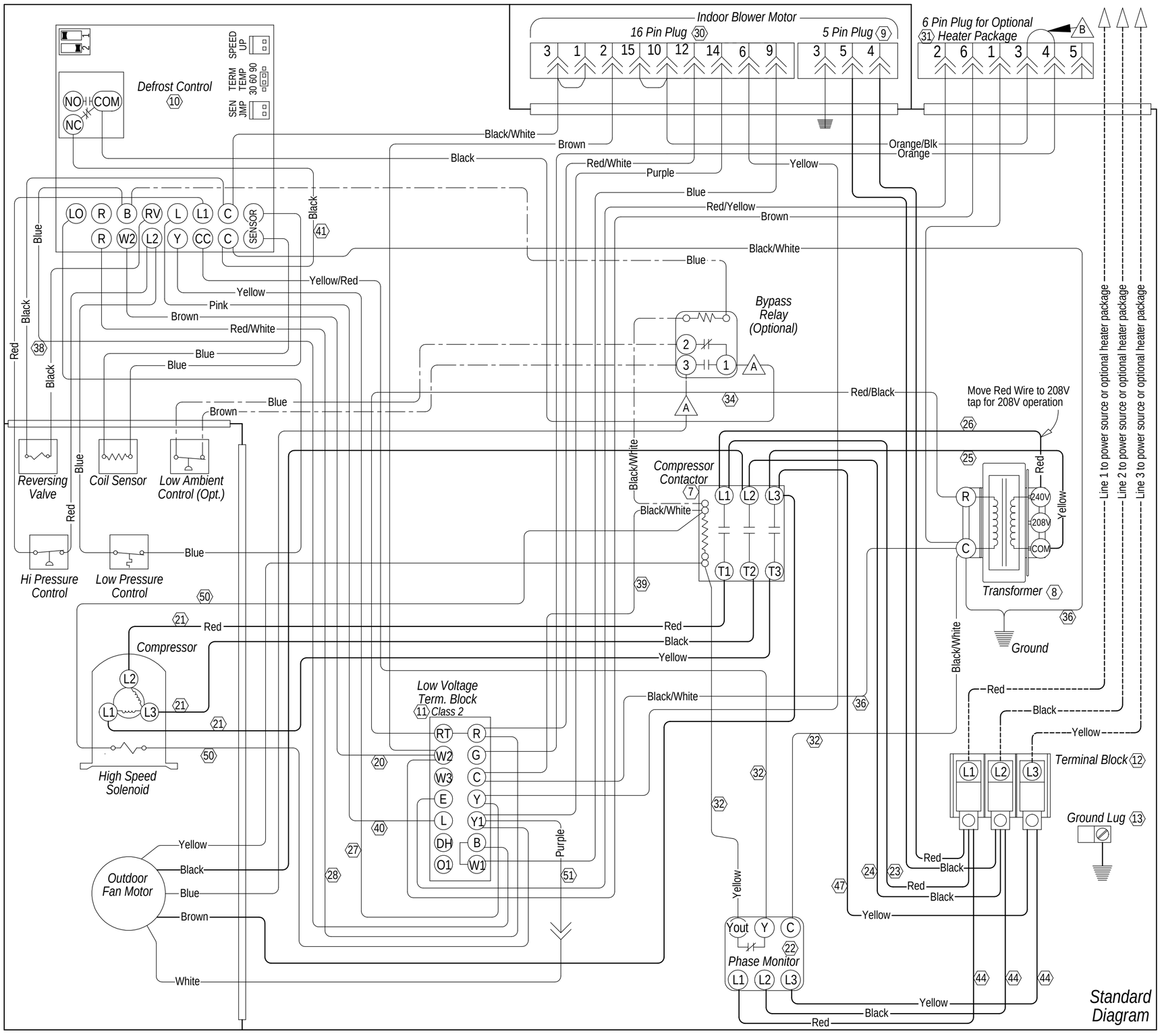

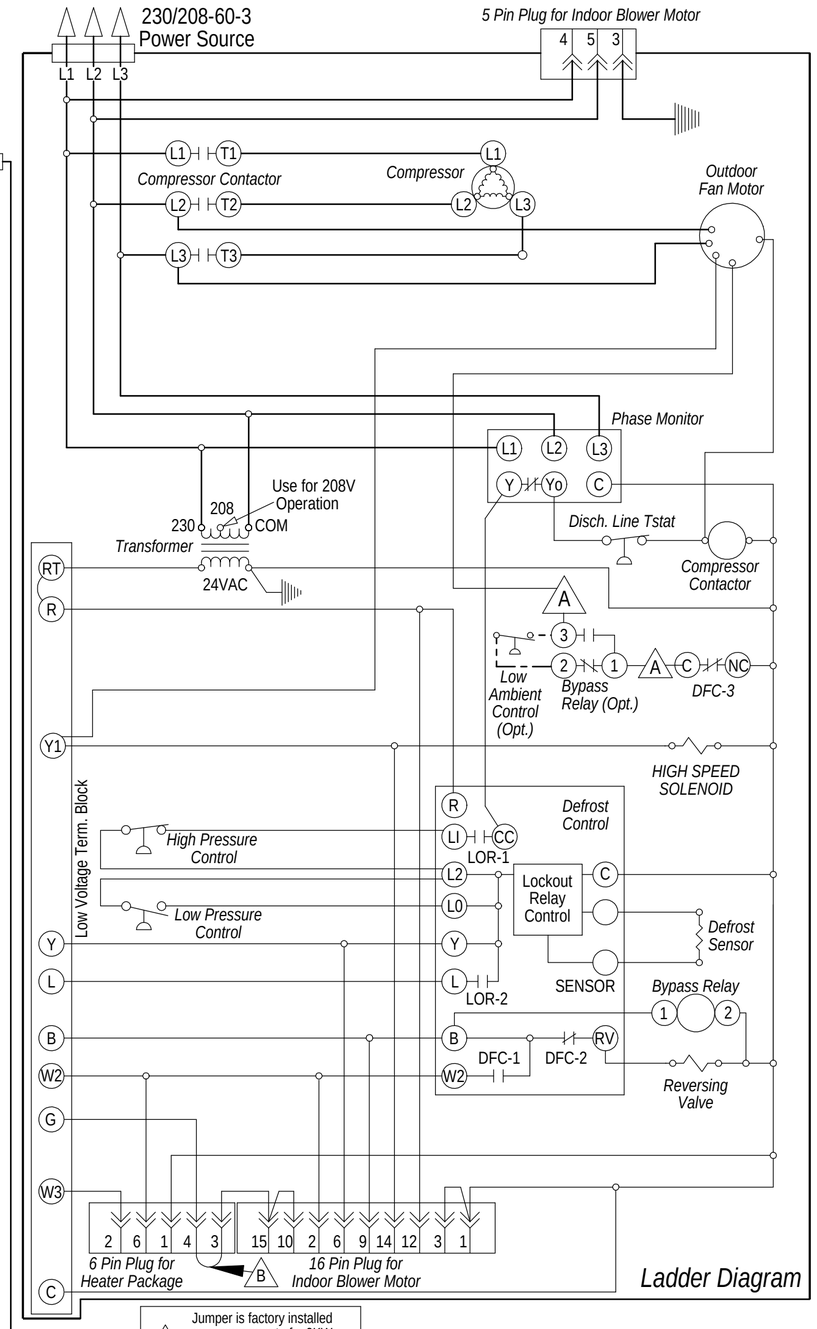

A Wires Connect if Option Not Used	Factory	Field	Optional
High Voltage			
Low Voltage			

B Jumper is factory installed as a component of a 0KW heater package option.

99 Wire Identification numbers for Bard use only.

WARNING
USE COPPER CONDUCTORS ONLY SUITABLE FOR AT LEAST 75° C.

DANGER
*ELECTRICAL SHOCK HAZARD
*DISCONNECT POWER BEFORE SERVICING.

4096-262 E