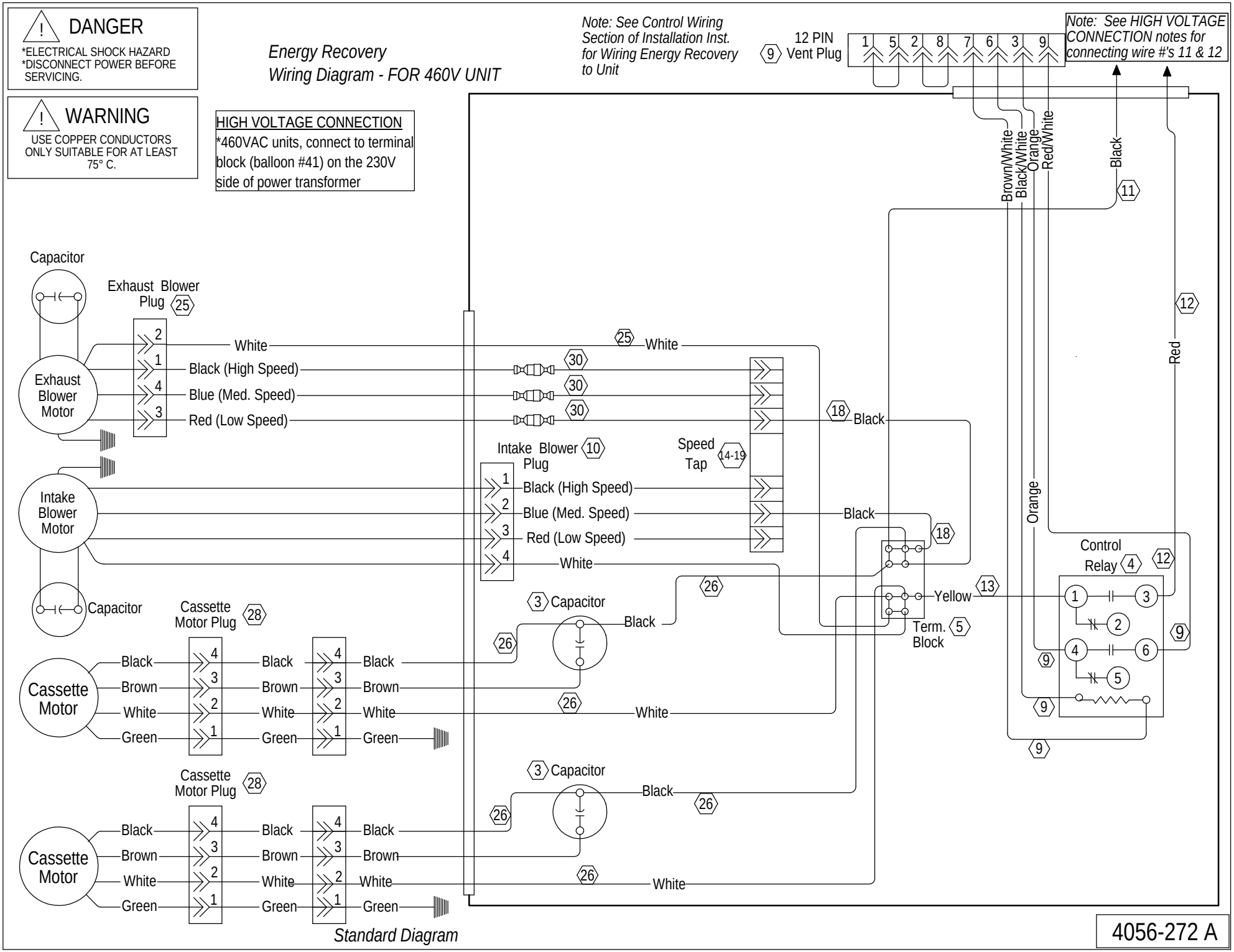
DANGER
*ELECTRICAL SHOCK HAZARD
*DISCONNECT POWER BEFORE SERVICING.
WARNING
USE COPPER CONDUCTORS ONLY SUITABLE FOR AT LEAST 75° C.
Energy Recovery
Wiring Diagram - FOR 460V UNIT
Note: See Control Wiring Section of Installation Inst. for Wiring Energy Recovery to Unit
9
12 PIN Vent Plug
1 5 2 8 7 6 3 9
Note: See HIGH VOLTAGE CONNECTION notes for connecting wire #'s 11 & 12
HIGH VOLTAGE CONNECTION
*460VAC units, connect to terminal block (balloon #41) on the 230V side of power transformer
Brown/White
Black/White
Orange
Red/White
Black
11
12
Red
Capacitor
Exhaust Blower Plug 25
Exhaust Blower Motor
2 White
1 Black (High Speed)
4 Blue (Med. Speed)
3 Red (Low Speed)
25 White
30
30
30
18 Black
Intake Blower 10 Plug
Speed Tap 14-19
Intake Blower Motor
1 Black (High Speed)
2 Blue (Med. Speed)
3 Red (Low Speed)
4 White
Black
18
Orange
Control Relay 4
12
Capacitor
Cassette Motor Plug 28
26
3 Capacitor
Black
Yellow
13
Term. Block 5
Cassette Motor
Black
Brown
White
Green
4 3 2 1
Black
Brown
White
Green
4 3 2 1
Black
Brown
White
Green
26
26
White
9
9
9
9
Cassette Motor Plug 28
3 Capacitor
Black
26
26
Cassette Motor
Black
Brown
White
Green
4 3 2 1
Black
Brown
White
Green
4 3 2 1
Black
Brown
White
Green
26
White
Standard Diagram
4056-272 A