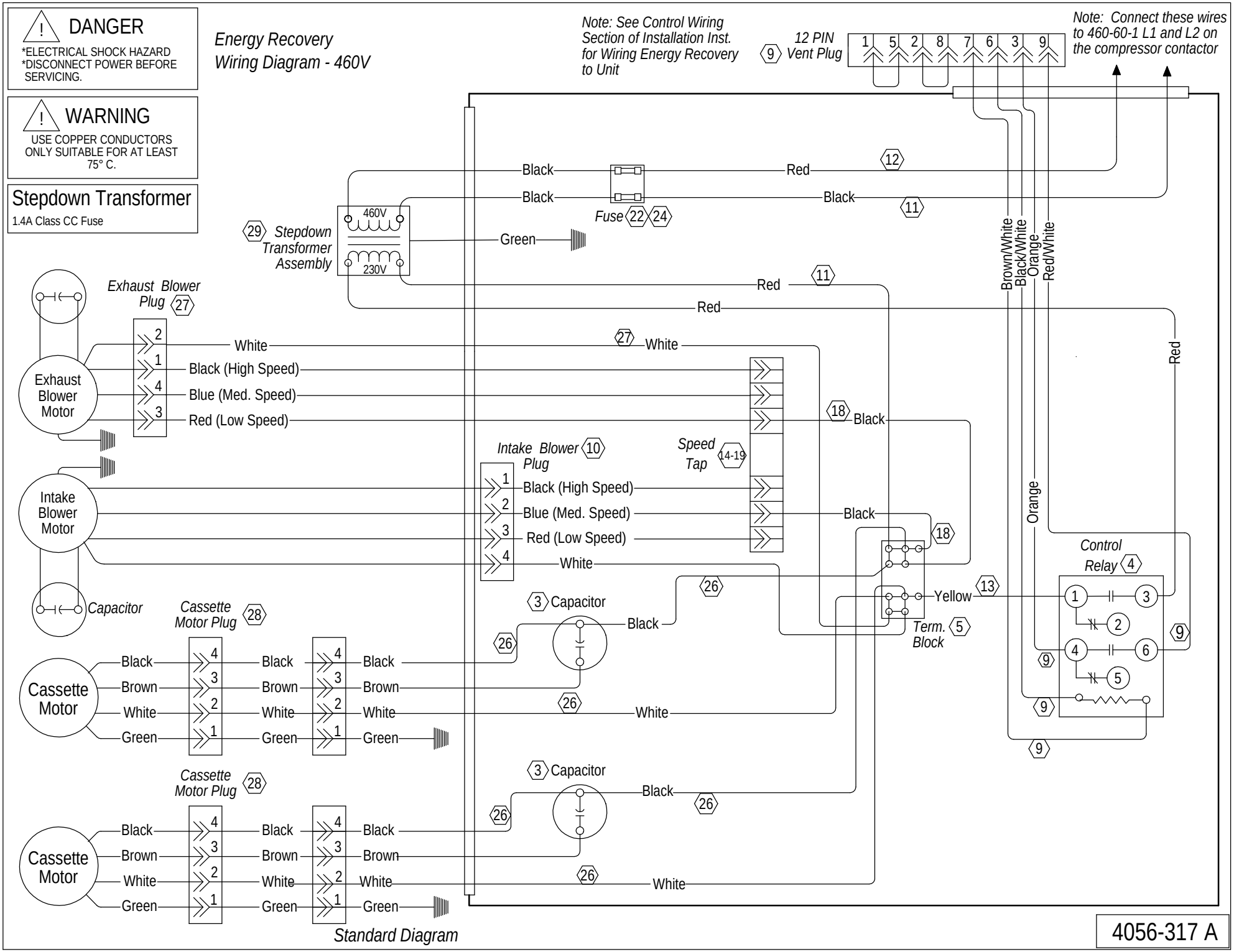
DANGER
*ELECTRICAL SHOCK HAZARD
*DISCONNECT POWER BEFORE SERVICING.
WARNING
USE COPPER CONDUCTORS ONLY SUITABLE FOR AT LEAST 75° C.
Stepdown Transformer
1.4A Class CC Fuse
Energy Recovery Wiring Diagram - 460V
Note: See Control Wiring Section of Installation Inst. for Wiring Energy Recovery to Unit
9 12 PIN Vent Plug
1 5 2 8 7 6 3 9
Note: Connect these wires to 460-60-1 L1 and L2 on the compressor contactor
Black
Red
12
Black
Black
11
Fuse 22 24
29 Stepdown Transformer Assembly
460V
230V
Green
Red
11
Red
Brown/White
Black/White
Orange
Red/White
Red
Exhaust Blower Plug 27
Exhaust Blower Motor
2 White
1 Black (High Speed)
4 Blue (Med. Speed)
3 Red (Low Speed)
27 White
18 Black
Intake Blower 10 Plug
Speed Tap 14-19
Intake Blower Motor
1 Black (High Speed)
2 Blue (Med. Speed)
3 Red (Low Speed)
4 White
Black
18
Orange
Control Relay 4
Capacitor
Cassette Motor Plug 28
26
3 Capacitor
Black
Yellow
13
Term. 5 Block
Cassette Motor
Black
Brown
White
Green
4 3 2 1
Black
Brown
White
Green
4 3 2 1
Black
Brown
White
Green
26
White
9
Cassette Motor Plug 28
3 Capacitor
Black
26
Cassette Motor
Black
Brown
White
Green
4 3 2 1
Black
Brown
White
Green
4 3 2 1
Black
Brown
White
Green
26
White
Standard Diagram
4056-317 A