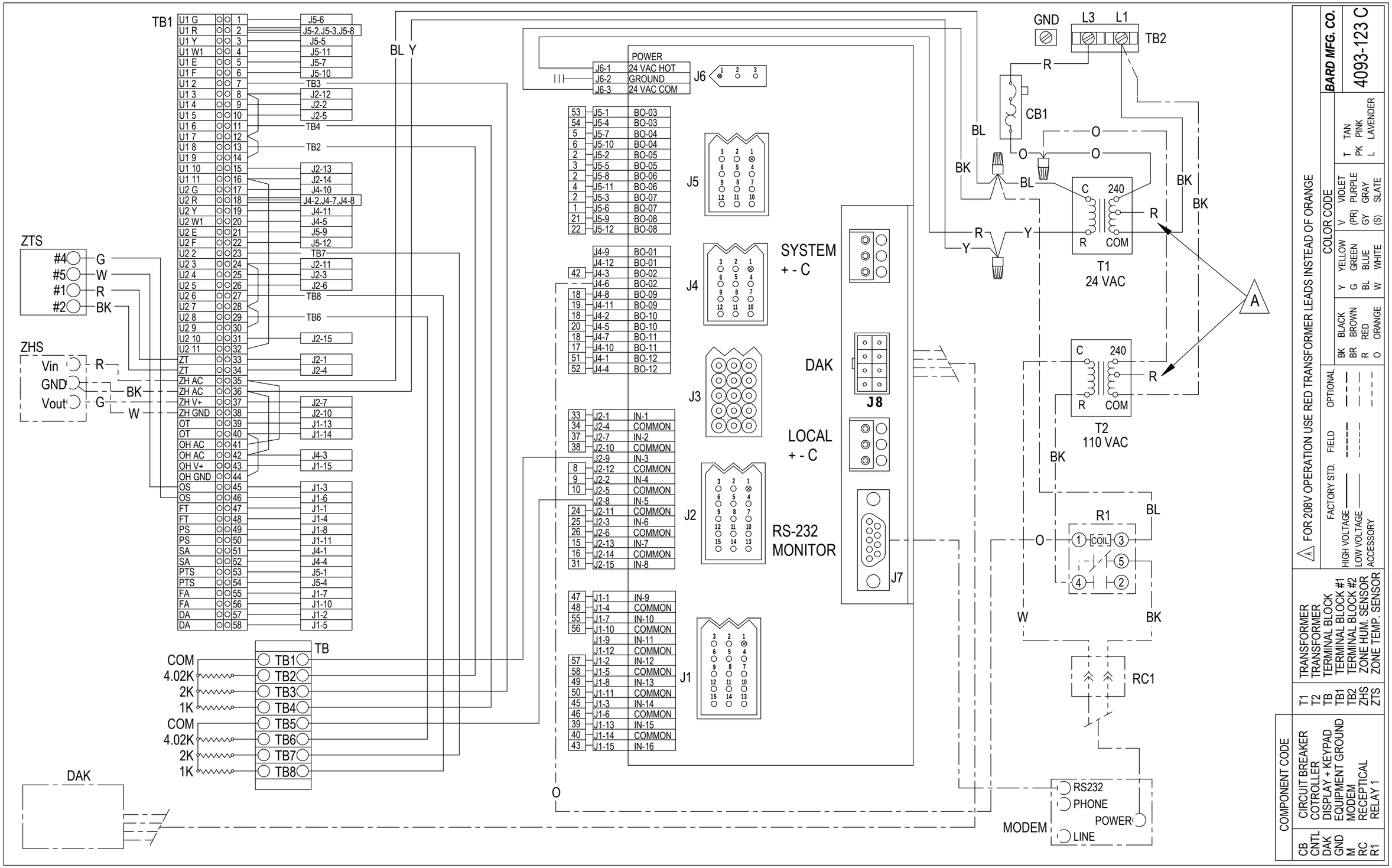


FOR 208V OPERATION USE RED TRANSFORMER LEADS INSTEAD OF ORANGE

| | FACTORY STD. | FIELD | OPTIONAL |
|---|---|---|---|
| HIGH VOLTAGE | | | |
| LOW VOLTAGE | | | |
| ACCESSORY | | | |

COLOR CODE

| | | | | | | | |
|---|---|---|---|---|---|---|---|
| BK | BLACK | Y | YELLOW | V | VIOLET | T | TAN |
| BR | BROWN | G | GREEN | (PR) | PURPLE | PK | PINK |
| R | RED | BL | BLUE | GY | GRAY | L | LAVENDER |
| O | ORANGE | W | WHITE | (S) | SLATE | | |

BARD MFG. CO.

4093-123 C

COMPONENT CODE

| | |
|---|---|
| CB | CIRCUIT BREAKER |
| CNTL | COTROLLER |
| DAK | DISPLAY + KEYPAD |
| GND | EQUIPMENT GROUND |
| M | MODEM |
| RC | RECEPTICAL |
| R1 | RELAY 1 |
| T1 | TRANSFORMER |
| T2 | TRANSFORMER |
| TB | TERMINAL BLOCK |
| TB1 | TERMINAL BLOCK #1 |
| TB2 | TERMINAL BLOCK #2 |
| ZHS | ZONE HUM. SENSOR |
| ZTS | ZONE TEMP. SENSOR |