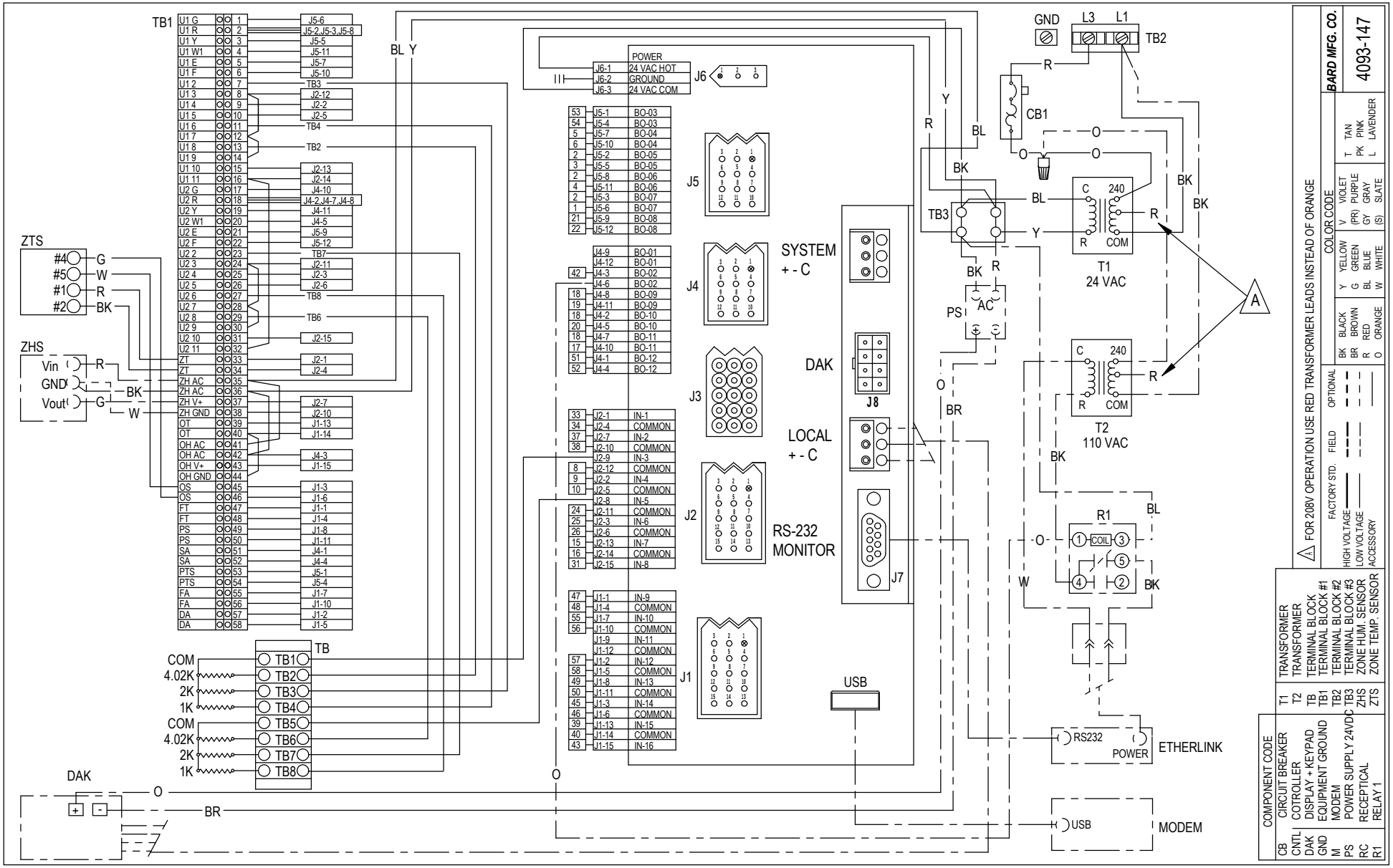

⚠1 FOR 208V OPERATION USE RED TRANSFORMER LEADS INSTEAD OF ORANGE

FACTORY STD.	FIELD	OPTIONAL
HIGH VOLTAGE		
LOW VOLTAGE		
ACCESSORY		

COLOR CODE							
BK	BLACK	Y	YELLOW	V	VIOLET	T	TAN
BR	BROWN	G	GREEN	(PR)	PURPLE	PK	PINK
R	RED	BL	BLUE	GY	GRAY	L	LAVENDER
O	ORANGE	W	WHITE	(S)	SLATE		

BARD MFG. CO.

4093-147

COMPONENT CODE			
CB	CIRCUIT BREAKER	T1	TRANSFORMER
CNTL	COTROLLER	T2	TRANSFORMER
DAK	DISPLAY + KEYPAD	TB	TERMINAL BLOCK
GND	EQUIPMENT GROUND	TB1	TERMINAL BLOCK #1
M	MODEM	TB2	TERMINAL BLOCK #2
PS	POWER SUPPLY 24VDC	TB3	TERMINAL BLOCK #3
RC	RECEPTICAL	ZHS	ZONE HUM. SENSOR
R1	RELAY 1	ZTS	ZONE TEMP. SENSOR