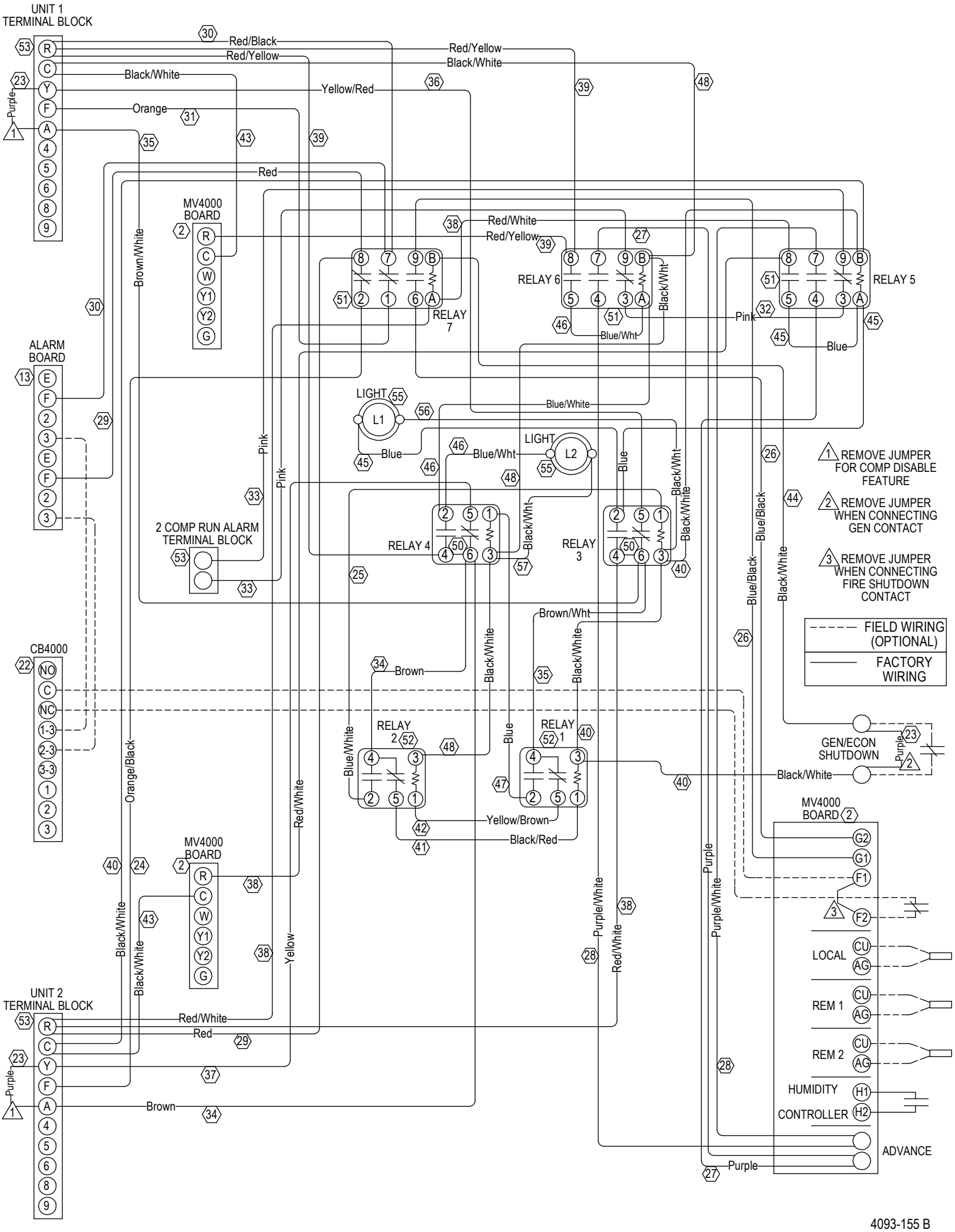
UNIT 1 TERMINAL BLOCK
MV4000 BOARD
ALARM BOARD
2 COMP RUN ALARM TERMINAL BLOCK
CB4000
UNIT 2 TERMINAL BLOCK
RELAY 7
RELAY 6
RELAY 5
RELAY 4
RELAY 3
RELAY 2
RELAY 1
LIGHT L1
LIGHT L2
GEN/ECON SHUTDOWN
LOCAL
REM 1
REM 2
HUMIDITY CONTROLLER
ADVANCE
1 REMOVE JUMPER FOR COMP DISABLE FEATURE
2 REMOVE JUMPER WHEN CONNECTING GEN CONTACT
3 REMOVE JUMPER WHEN CONNECTING FIRE SHUTDOWN CONTACT
FIELD WIRING (OPTIONAL)
FACTORY WIRING
4093-155 B