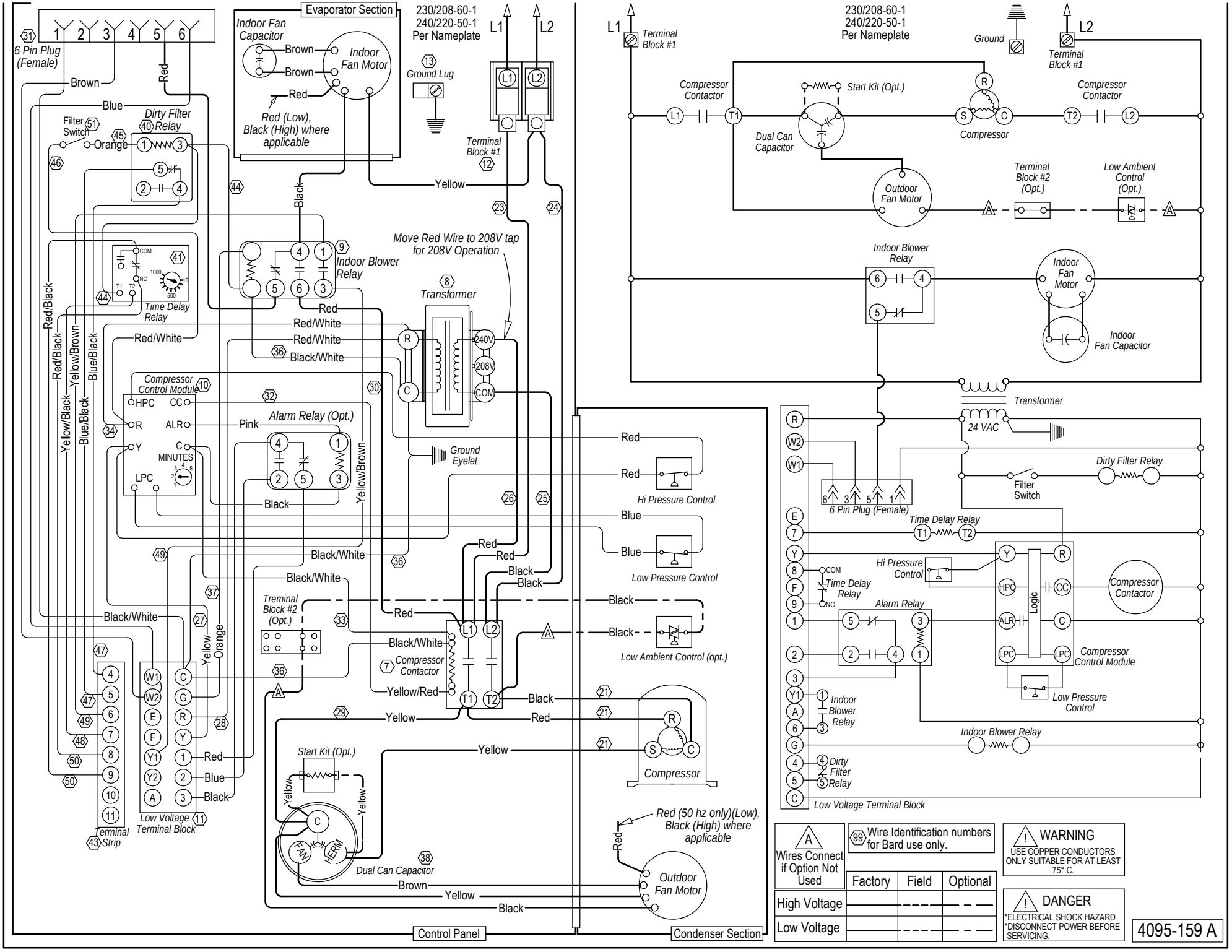
Evaporator Section
Indoor Fan Capacitor
Indoor Fan Motor
Brown
Red
Red (Low), Black (High) where applicable
6 Pin Plug (Female)
Filter Switch
Orange
Dirty Filter Relay
Blue
Black
Yellow
230/208-60-1
240/220-50-1
Per Nameplate
Ground Lug
L1
L2
Terminal Block #1
Move Red Wire to 208V tap for 208V Operation
Indoor Blower Relay
Transformer
240V
208V
COM
Time Delay Relay
Red/Black
Red/White
Black/White
Yellow/Black
Yellow/Brown
Blue/Black
Compressor Control Module
HPC
CC
R
ALR
Y
C
MINUTES
LPC
Alarm Relay (Opt.)
Pink
Ground Eyelet
Hi Pressure Control
Low Pressure Control
Low Ambient Control (opt.)
Treminal Block #2 (Opt.)
Compressor Contactor
Yellow/Red
Start Kit (Opt.)
Dual Can Capacitor
FAN
HERM
Compressor
Red (50 hz only)(Low), Black (High) where applicable
Outdoor Fan Motor
Terminal Strip
Low Voltage Terminal Block
Control Panel
Condenser Section
Ground
Compressor Contactor
Start Kit (Opt.)
Dual Can Capacitor
Compressor
Outdoor Fan Motor
Terminal Block #2 (Opt.)
Low Ambient Control (Opt.)
Indoor Blower Relay
Indoor Fan Motor
Indoor Fan Capacitor
Transformer
24 VAC
Dirty Filter Relay
Filter Switch
6 Pin Plug (Female)
Time Delay Relay
Hi Pressure Control
Alarm Relay
Logic
Compressor Contactor
Compressor Control Module
Low Pressure Control
Indoor Blower Relay
Dirty Filter Relay
Low Voltage Terminal Block
Wires Connect if Option Not Used
Wire Identification numbers for Bard use only.
Factory
Field
Optional
High Voltage
Low Voltage
WARNING
USE COPPER CONDUCTORS ONLY SUITABLE FOR AT LEAST 75° C.
DANGER
*ELECTRICAL SHOCK HAZARD
*DISCONNECT POWER BEFORE SERVICING.
4095-159 A