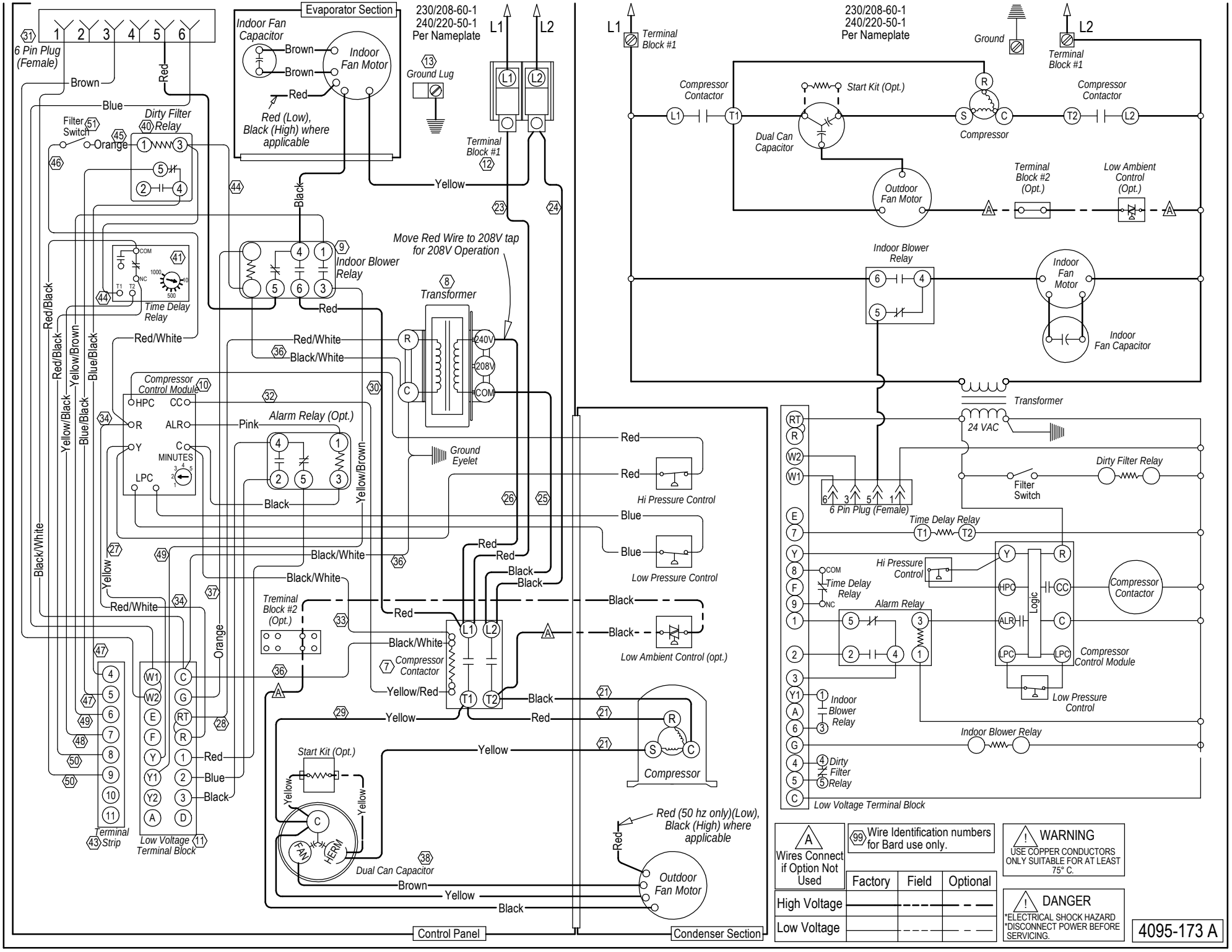
Evaporator Section
Indoor Fan Capacitor
Indoor Fan Motor
Brown
Red
Red (Low), Black (High) where applicable
230/208-60-1
240/220-50-1
Per Nameplate
L1
L2
Ground Lug
Terminal Block #1
6 Pin Plug (Female)
Filter Switch
Orange
Dirty Filter Relay
Blue
Yellow
Black
Time Delay Relay
Indoor Blower Relay
Move Red Wire to 208V tap for 208V Operation
Transformer
240V
208V
COM
Red/White
Black/White
Compressor Control Module
HPC
CC
R
ALR
Y
C
MINUTES
LPC
Pink
Alarm Relay (Opt.)
Ground Eyelet
Hi Pressure Control
Low Pressure Control
Low Ambient Control (opt.)
Treminal Block #2 (Opt.)
Compressor Contactor
Yellow/Red
Start Kit (Opt.)
Dual Can Capacitor
FAN
HERM
Compressor
Red (50 hz only)(Low), Black (High) where applicable
Outdoor Fan Motor
Terminal Strip
Low Voltage Terminal Block
Control Panel
Condenser Section
Compressor Contactor
Start Kit (Opt.)
Compressor
Dual Can Capacitor
Outdoor Fan Motor
Terminal Block #2 (Opt.)
Low Ambient Control (Opt.)
Indoor Blower Relay
Indoor Fan Motor
Indoor Fan Capacitor
Transformer
24 VAC
Dirty Filter Relay
Filter Switch
6 Pin Plug (Female)
Time Delay Relay
Hi Pressure Control
Alarm Relay
Logic
Compressor Contactor
Compressor Control Module
Low Pressure Control
Indoor Blower Relay
Low Voltage Terminal Block
Wires Connect if Option Not Used
Wire Identification numbers for Bard use only.
Factory
Field
Optional
High Voltage
Low Voltage
WARNING
USE COPPER CONDUCTORS ONLY SUITABLE FOR AT LEAST 75° C.
DANGER
*ELECTRICAL SHOCK HAZARD
*DISCONNECT POWER BEFORE SERVICING.
4095-173 A