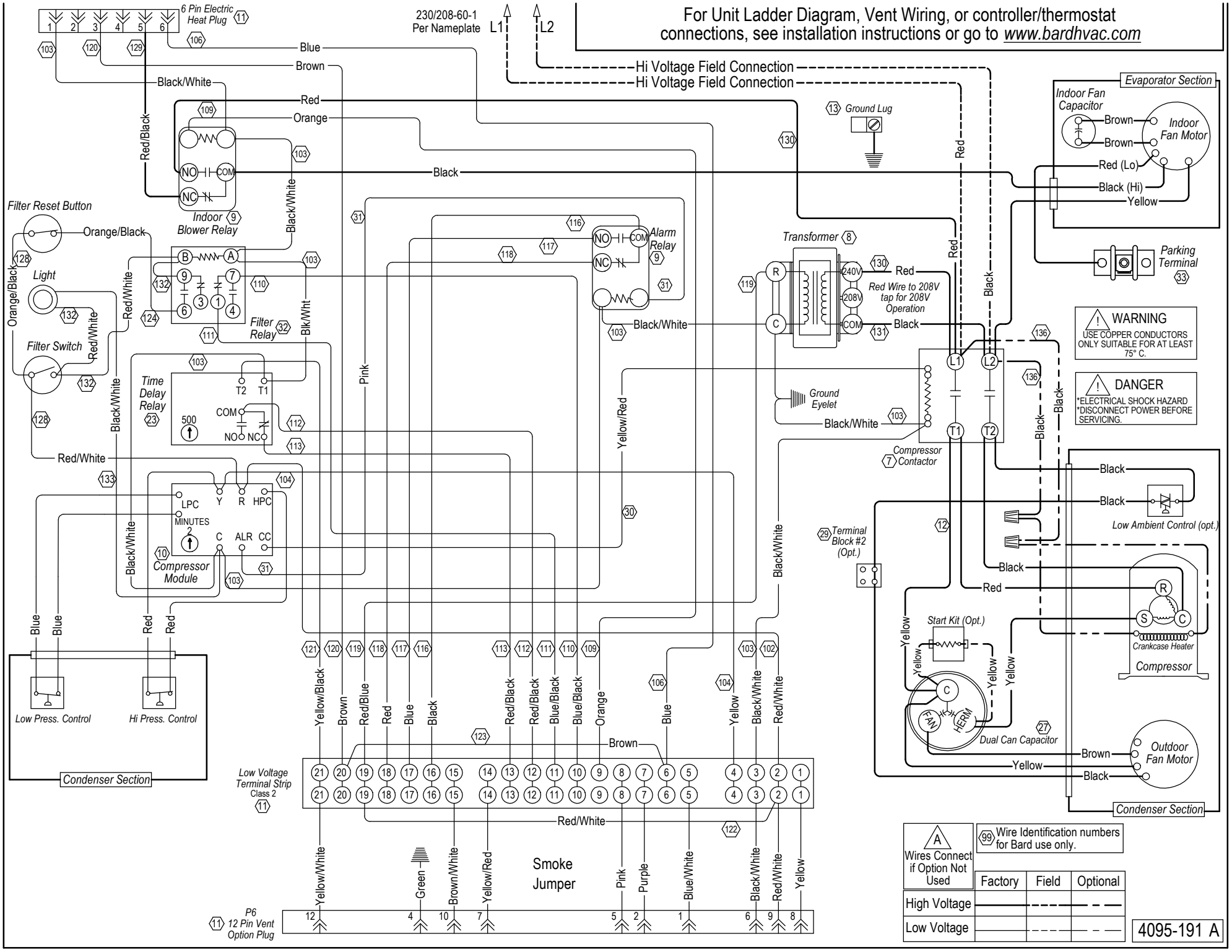For Unit Ladder Diagram, Vent Wiring, or controller/thermostat connections, see installation instructions or go to www.bardhvac.com