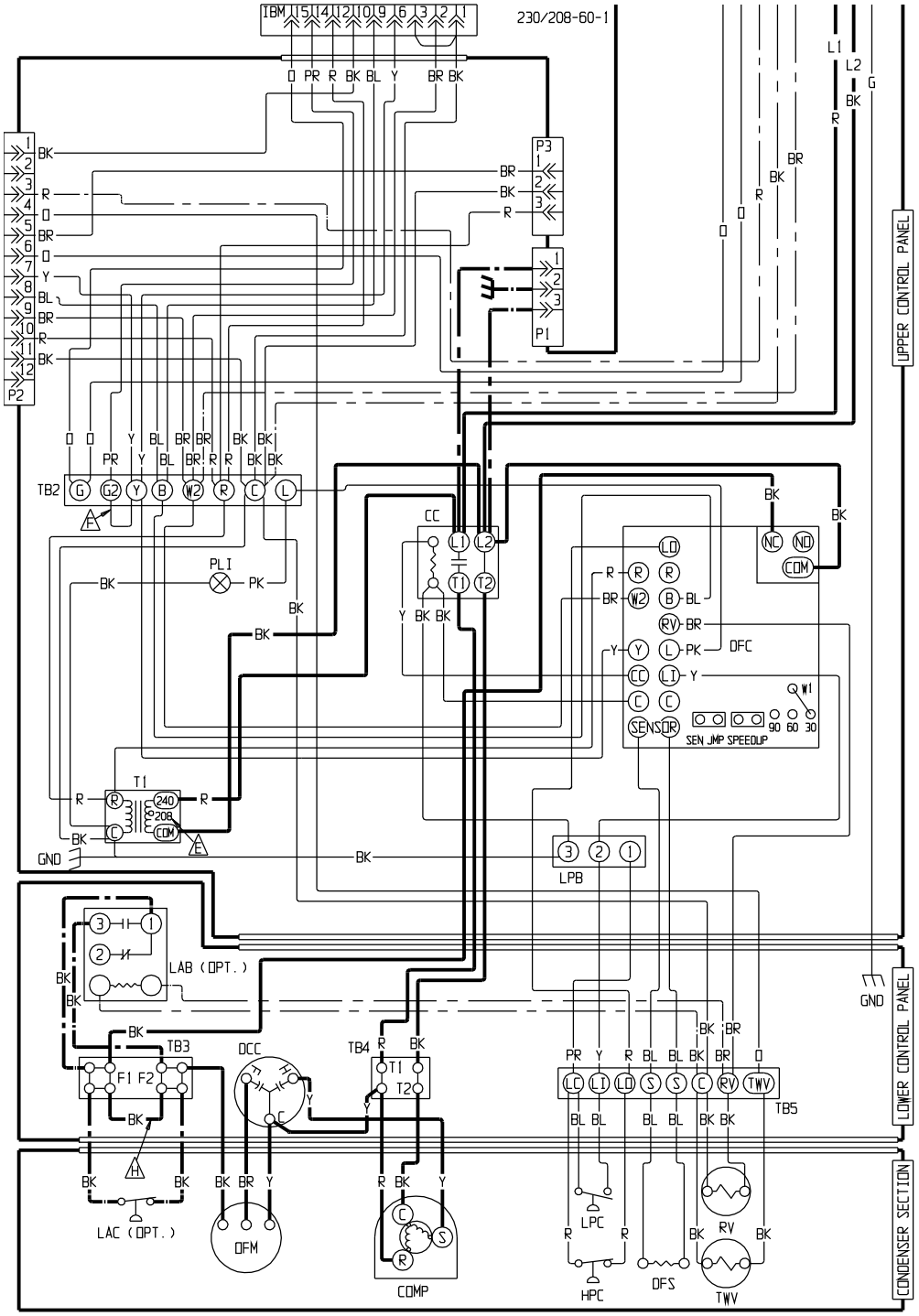

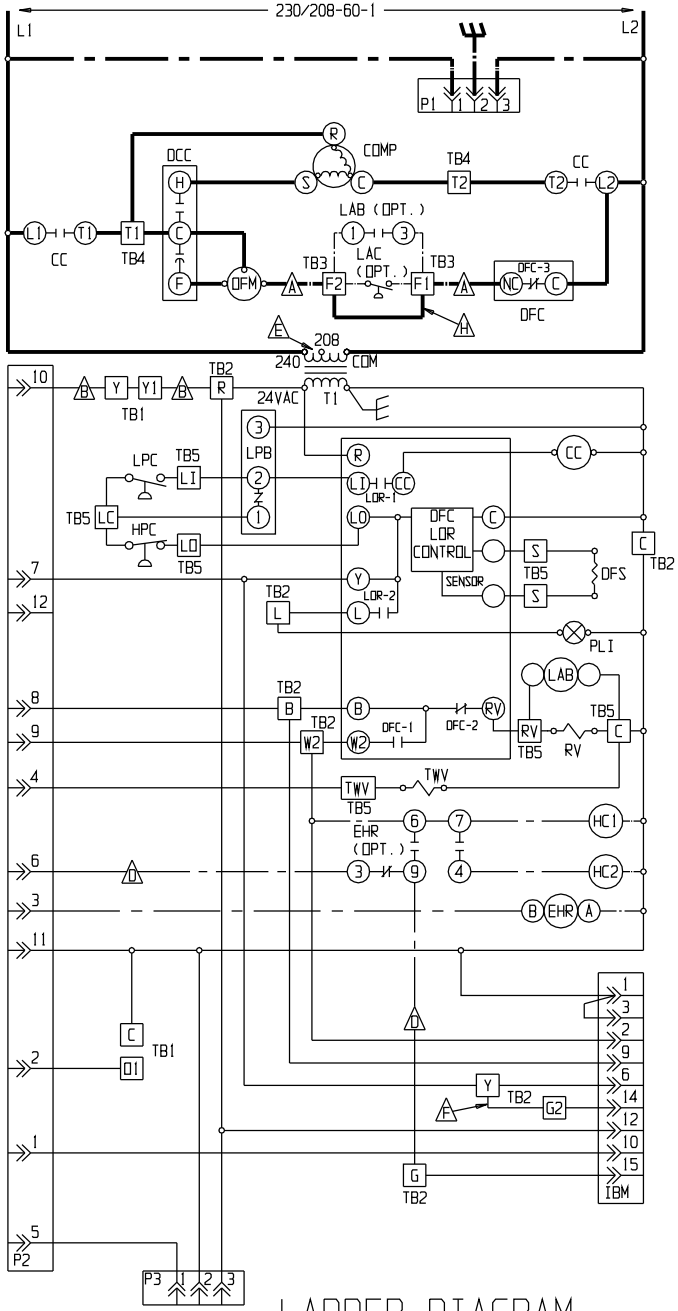

LADDER DIAGRAM

4100-114

COMPONENT CODE	
CB1	CIRCUIT BREAKER #1
CB2	CIRCUIT BREAKER #2
CC	COMPRESSOR CONTACTOR
COMP	COMPRESSOR
DCC	DUAL CAN CAPACITOR
DFC	DEFROST CONTROL
DFS	DEFROST SENSOR
FB	FUSE BLOCK
GND	GROUND
HC1	HEATER CONTACTOR #1
HC2	HEATER CONTACTOR #2
HPC	HIGH PRESSURE CONTROL
HS1	HEAT STRIP #1
HS2	HEAT STRIP #2
IBM	INDOOR BLOWER MOTOR
LAB	LOW AMBIENT BYPASS
LAC	LOW AMBIENT CONTROL
LPB	LOW PRESSURE BYPASS
LPC	LOW PRESSURE CONTROL
LS	LIMIT SWITCH
OFM	OUTDOOR FAN MOTOR
P1	ACCESSORY PLUG #1
P2	ACCESSORY PLUG #2
P3	ACCESSORY PLUG #3
PLI	PRESSURE LOCKOUT INDICATOR
PM	PHASE MONITOR
RV	REV. VALVE SOLINOID
T1	TRANSFORMER #1
T2	TRANSFORMER #2
TB1	TERMINAL BLOCK #1
TB2	TERMINAL BLOCK #2
TB3	TERMINAL BLOCK #3
TB4	TERMINAL BLOCK #4
TB5	TERMINAL BLOCK #5
TB6	TERMINAL BLOCK #6
TB7	TERMINAL BLOCK #7
TWV	THREE WAY VALVE

A B C D LABELED WIRES CONNECT IF NO OPTIONS USED.

E MOVE RED WIRE TO 208V TAP FOR 208V OPERATION

F INSTALL JUMPER FOR HIGH SPEED BLOWER OPER. ON MODELS 36 & 42

H REMOVE JUMPER WHEN LAC IS INSTALLED

WIRING CODE	FACTORY STD.	FIELD	OPTIONAL
HIGH VOLTAGE			
LOW VOLTAGE			
ACCESSORY			

COLOR CODE			
BK	BLACK	PK	PINK
BL	BLUE	PR	PURPLE
BR	BROWN	R	RED
G	GREEN	T	TAN
O	ORANGE	Y	YELLOW