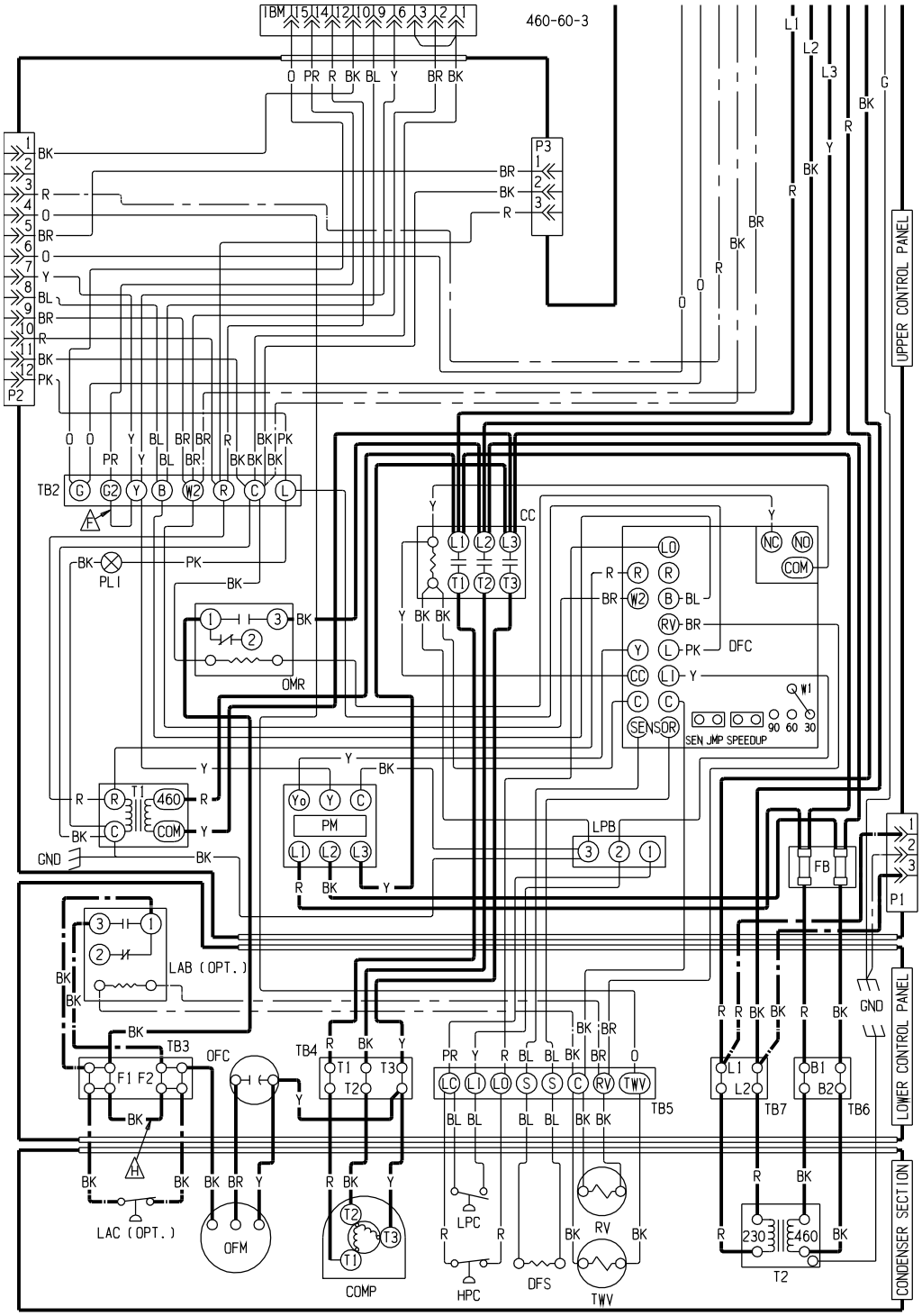

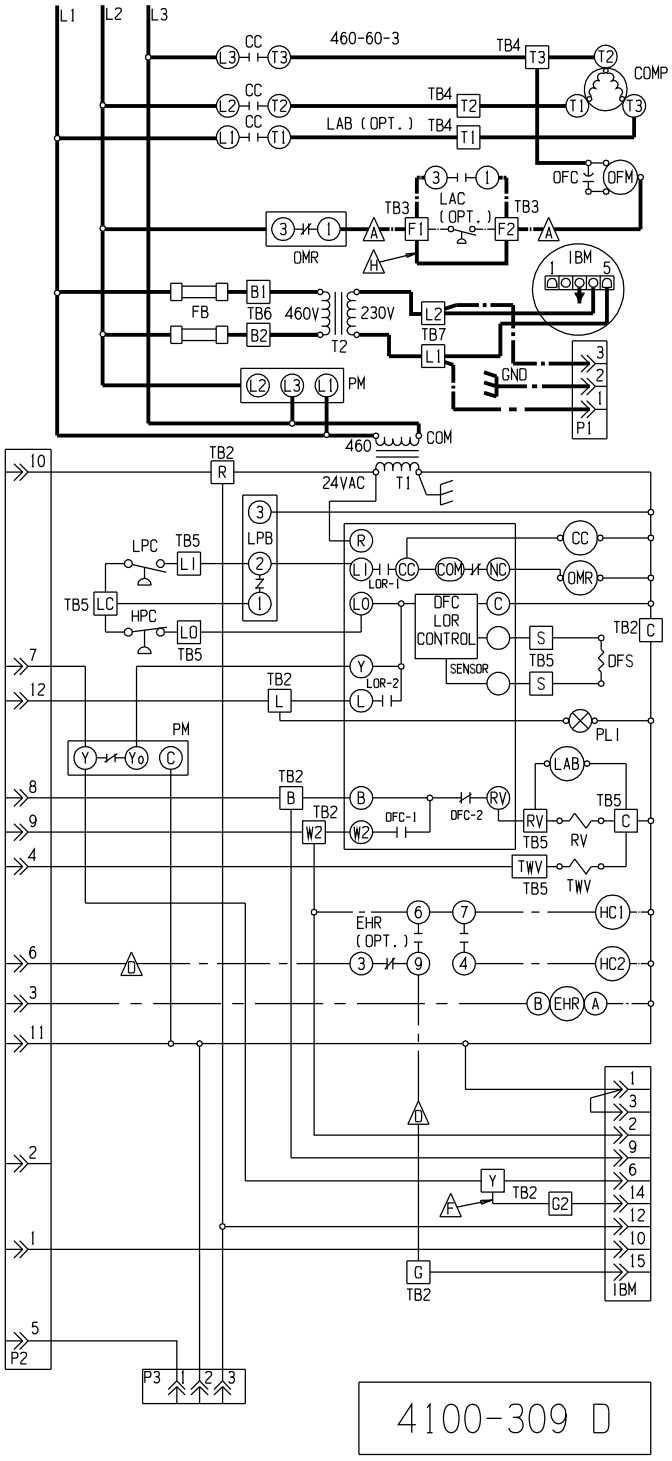

4100-309 D

COMPONENT CODE	
CB1	CIRCUIT BREAKER #1
CB2	CIRCUIT BREAKER #2
CC	COMPRESSOR CONTACTOR
COMP	COMPRESSOR
DCC	DUAL CAN CAPACITOR
DFC	DEFROST CONTROL
DFS	DEFROST SENSOR
FB	FUSE BLOCK
GND	GROUND
HC1	HEATER CONTACTOR #1
HC2	HEATER CONTACTOR #2
HPC	HIGH PRESSURE CONTROL
HS1	HEAT STRIP #1
HS2	HEAT STRIP #2
IBM	INDOOR BLOWER MOTOR
LAB	LOW AMBIENT BYPASS
LAC	LOW AMBIENT CONTROL
LPB	LOW PRESSURE BYPASS
LPC	LOW PRESSURE CONTROL
LS	LIMIT SWITCH
OFM	OUTDOOR FAN MOTOR
OMR	OUTDOOR MOTOR RELAY
P1	ACCESSORY PLUG #1
P2	ACCESSORY PLUG #2
P3	ACCESSORY PLUG #3
PLI	PRESSURE LOCKOUT INDICATOR
PM	PHASE MONITOR
RV	REV. VALVE SOLINOID
T1	TRANSFORMER #1
T2	TRANSFORMER #2
TB1	TERMINAL BLOCK #1
TB2	TERMINAL BLOCK #2
TB3	TERMINAL BLOCK #3
TB4	TERMINAL BLOCK #4
TB5	TERMINAL BLOCK #5
TB6	TERMINAL BLOCK #6
TB7	TERMINAL BLOCK #7
TWV	THREE WAY VALVE

A B C D LABELED WIRES CONNECT IF NO OPTIONS USED.

E MOVE RED WIRE TO 208V TAP FOR 208V OPERATION

F INSTALL JUMPER FOR HIGH SPEED BLOWER OPER. ON MODELS 36 & 42

FUSES	
1 KVA	3.2 A
1.5 KVA	5.0 A
2 KVA	7.0 A
3 KVA	10.0 A

H REMOVE JUMPER WHEN LAC IS INSTALLED

WIRING CODE	FACTORY STD.	FIELD	OPTIONAL
HIGH VOLTAGE			
LOW VOLTAGE			
ACCESSORY			

COLOR CODE			
BK	BLACK	PK	PINK
BL	BLUE	PR	PURPLE
BR	BROWN	R	RED
G	GREEN	T	TAN
O	ORANGE	Y	YELLOW