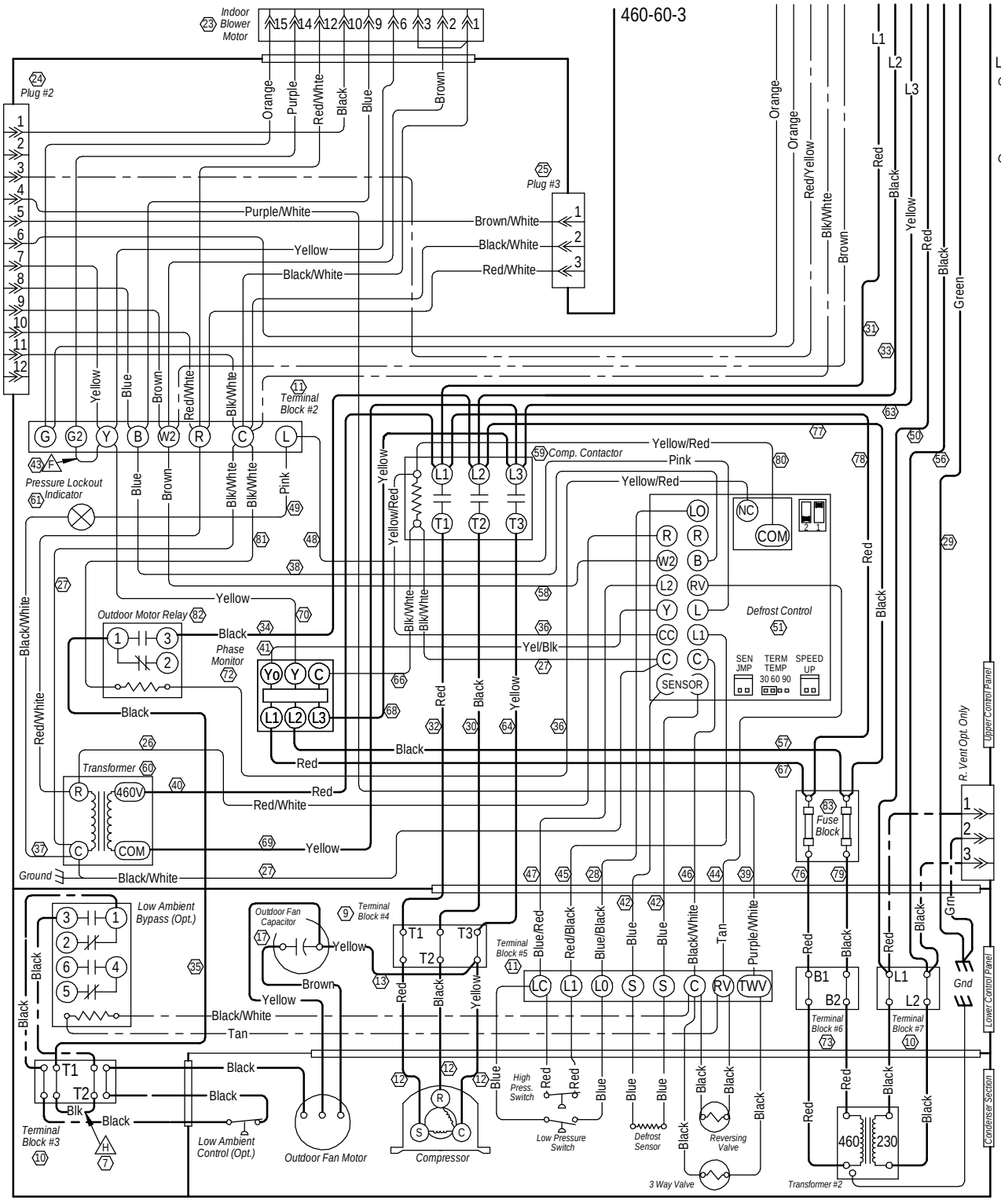


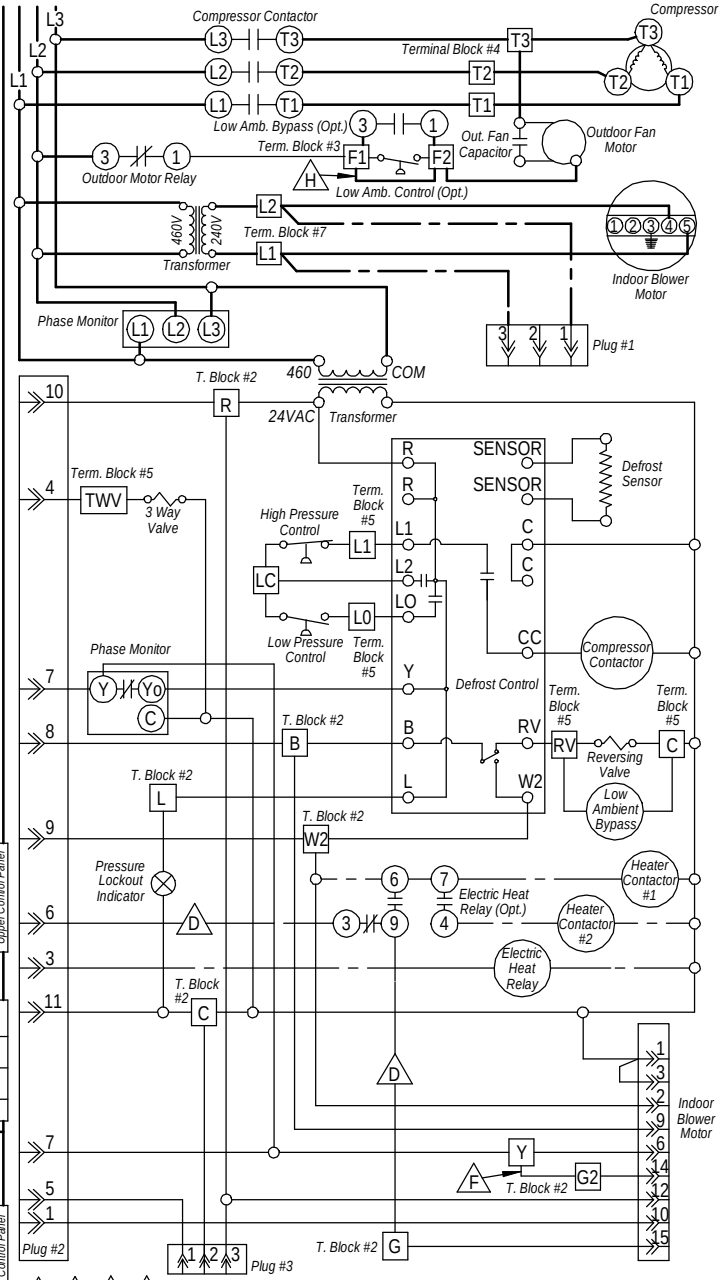


A B C D Labeled wires connect if no options used.

F Install jumper for hi speed blower oper. on models 36, 42, 48, and 60.

H Remove jumper when Low Amb. Bypass is installed.

| | Factory | Field | Optional |
|---|---|---|---|
| High Voltage | | | |
| Low Voltage | | | |

**WARNING**
USE COPPER CONDUCTORS ONLY SUITABLE FOR AT LEAST 75° C.

**DANGER**
*ELECTRICAL SHOCK HAZARD
*DISCONNECT POWER BEFORE SERVICING.

Bard SINCE 1914
Bard Mfg. Co.
Bryan, Ohio

4100-317