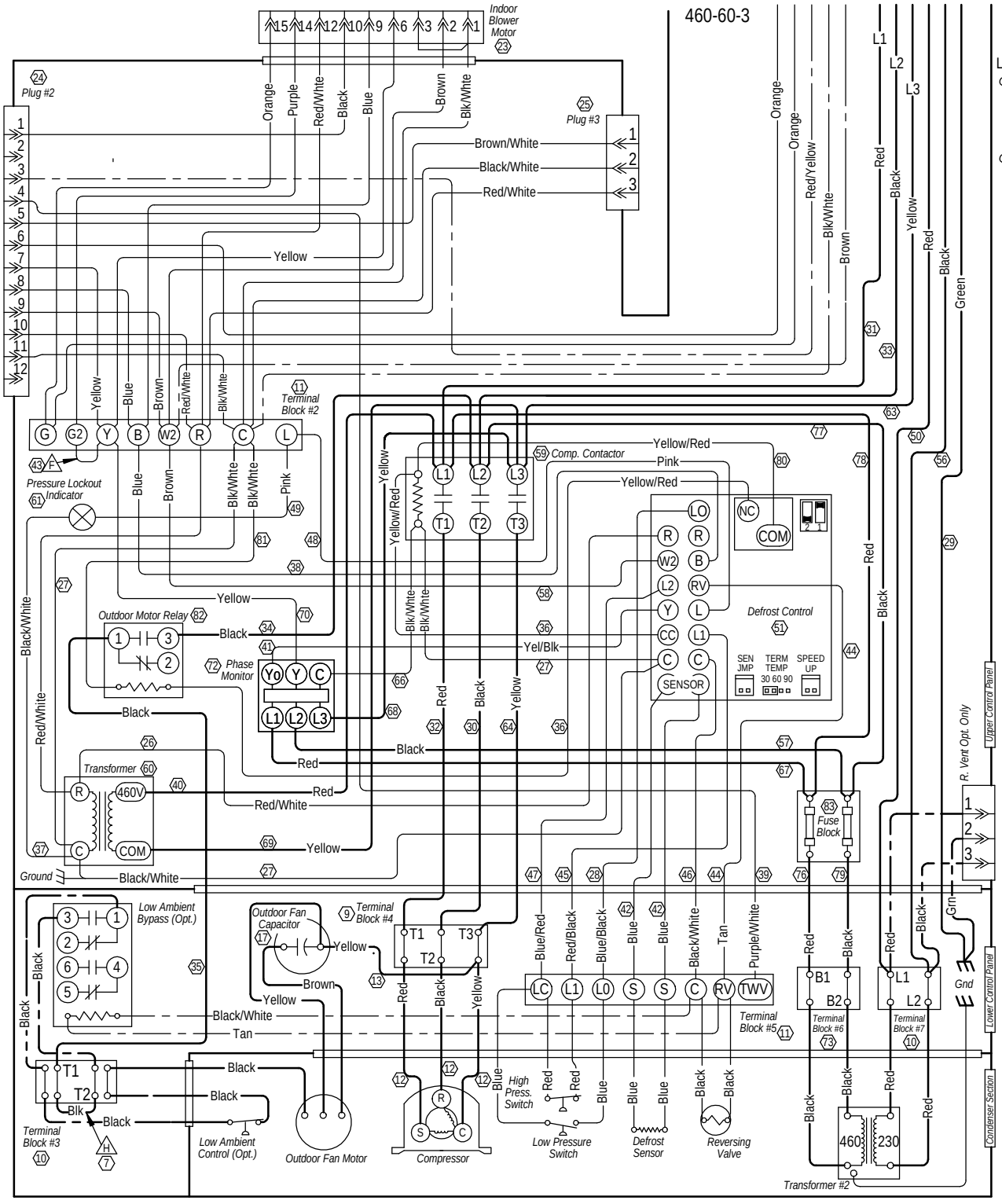

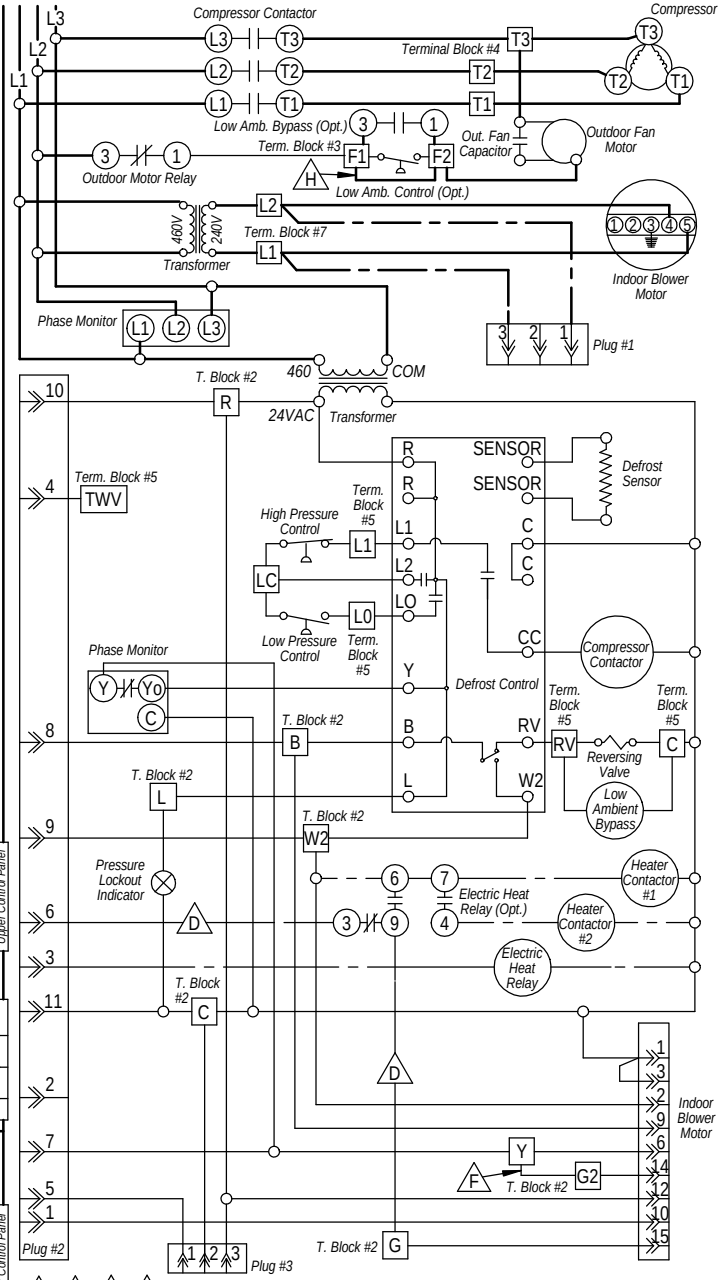

A B C D Labeled wires connect if no options used.

F Install jumper for hi speed blower oper. on models 36, 42, 48, and 60.

H Remove jumper when Low Amb. Bypass is installed.

	Factory	Field	Optional
High Voltage			
Low Voltage			

WARNING
USE COPPER CONDUCTORS ONLY SUITABLE FOR AT LEAST 75° C.

DANGER
*ELECTRICAL SHOCK HAZARD
*DISCONNECT POWER BEFORE SERVICING.

Bard SINCE 1914

Bard Mfg. Co.
Bryan, Ohio

4100-321