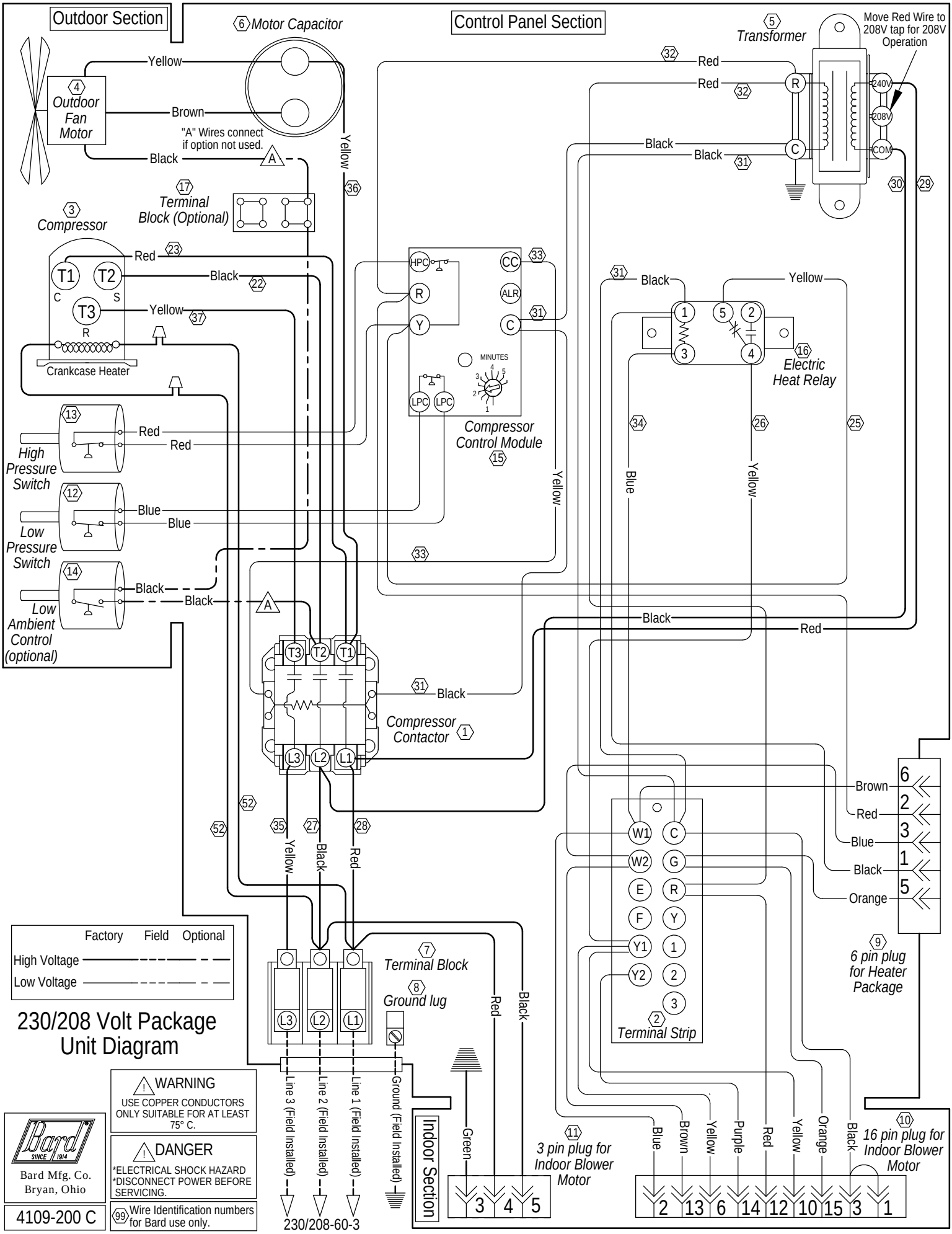
Outdoor Section
Control Panel Section
6 Motor Capacitor
5 Transformer
Move Red Wire to 208V tap for 208V Operation
240V
208V
COM
4 Outdoor Fan Motor
Yellow
Brown
Black
"A" Wires connect if option not used.
A
17 Terminal Block (Optional)
3 Compressor
T1
T2
T3
C
S
R
Crankcase Heater
Red
Black
Yellow
HPC
R
Y
CC
ALR
C
MINUTES
LPC
LPC
Compressor Control Module
15
Electric Heat Relay
16
13 High Pressure Switch
12 Low Pressure Switch
14 Low Ambient Control (optional)
Blue
Compressor Contactor
1
T3
T2
T1
L3
L2
L1
Brown
Red
Blue
Black
Orange
6 pin plug for Heater Package
9
W1
W2
E
F
Y1
Y2
C
G
R
Y
1
2
3
Terminal Strip
2
Factory
Field
Optional
High Voltage
Low Voltage
230/208 Volt Package Unit Diagram
7 Terminal Block
8 Ground lug
Green
3 pin plug for Indoor Blower Motor
11
Blue
Brown
Yellow
Purple
Red
Yellow
Orange
Black
16 pin plug for Indoor Blower Motor
10
Line 3 (Field Installed)
Line 2 (Field Installed)
Line 1 (Field Installed)
Ground (Field Installed)
230/208-60-3
Indoor Section
WARNING
USE COPPER CONDUCTORS ONLY SUITABLE FOR AT LEAST 75° C.
DANGER
*ELECTRICAL SHOCK HAZARD
*DISCONNECT POWER BEFORE SERVICING.
99 Wire Identification numbers for Bard use only.
Bard SINCE 1914
Bard Mfg. Co.
Bryan, Ohio
4109-200 C