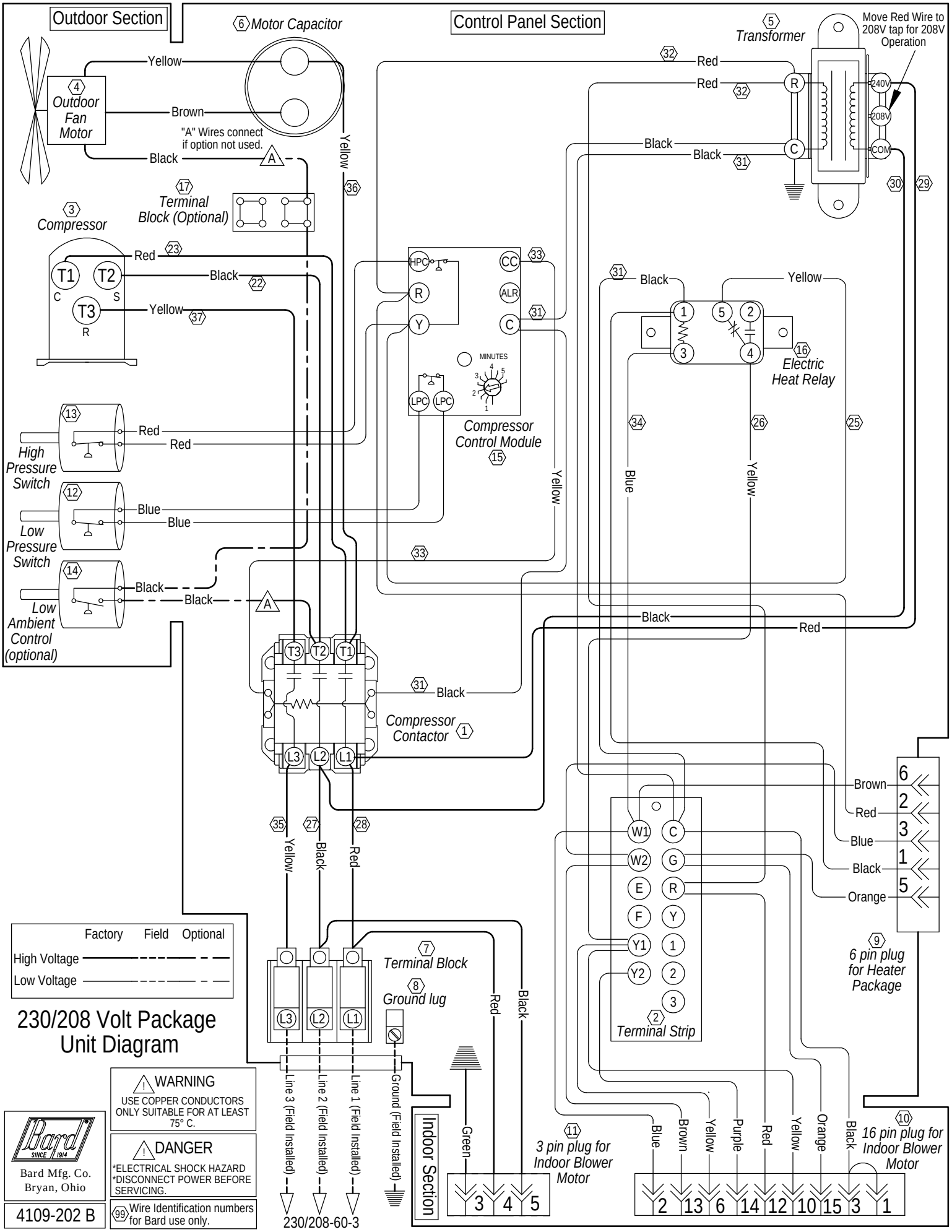
Outdoor Section
Control Panel Section
Indoor Section
4 Outdoor Fan Motor
6 Motor Capacitor
5 Transformer
Move Red Wire to 208V tap for 208V Operation
240V
208V
COM
"A" Wires connect if option not used.
17 Terminal Block (Optional)
3 Compressor
T1
T2
T3
C
S
R
HPC
CC
ALR
LPC
MINUTES
Compressor Control Module 15
16 Electric Heat Relay
13 High Pressure Switch
12 Low Pressure Switch
14 Low Ambient Control (optional)
T3 T2 T1
L3 L2 L1
Compressor Contactor 1
W1 W2 E F Y1 Y2
C G R Y 1 2 3
2 Terminal Strip
7 Terminal Block
8 Ground lug
9 6 pin plug for Heater Package
11 3 pin plug for Indoor Blower Motor
10 16 pin plug for Indoor Blower Motor
Line 3 (Field Installed)
Line 2 (Field Installed)
Line 1 (Field Installed)
Ground (Field Installed)
230/208-60-3
Factory Field Optional
High Voltage
Low Voltage
230/208 Volt Package Unit Diagram
WARNING
USE COPPER CONDUCTORS ONLY SUITABLE FOR AT LEAST 75° C.
DANGER
*ELECTRICAL SHOCK HAZARD
*DISCONNECT POWER BEFORE SERVICING.
99 Wire Identification numbers for Bard use only.
Bard SINCE 1914
Bard Mfg. Co.
Bryan, Ohio
4109-202 B