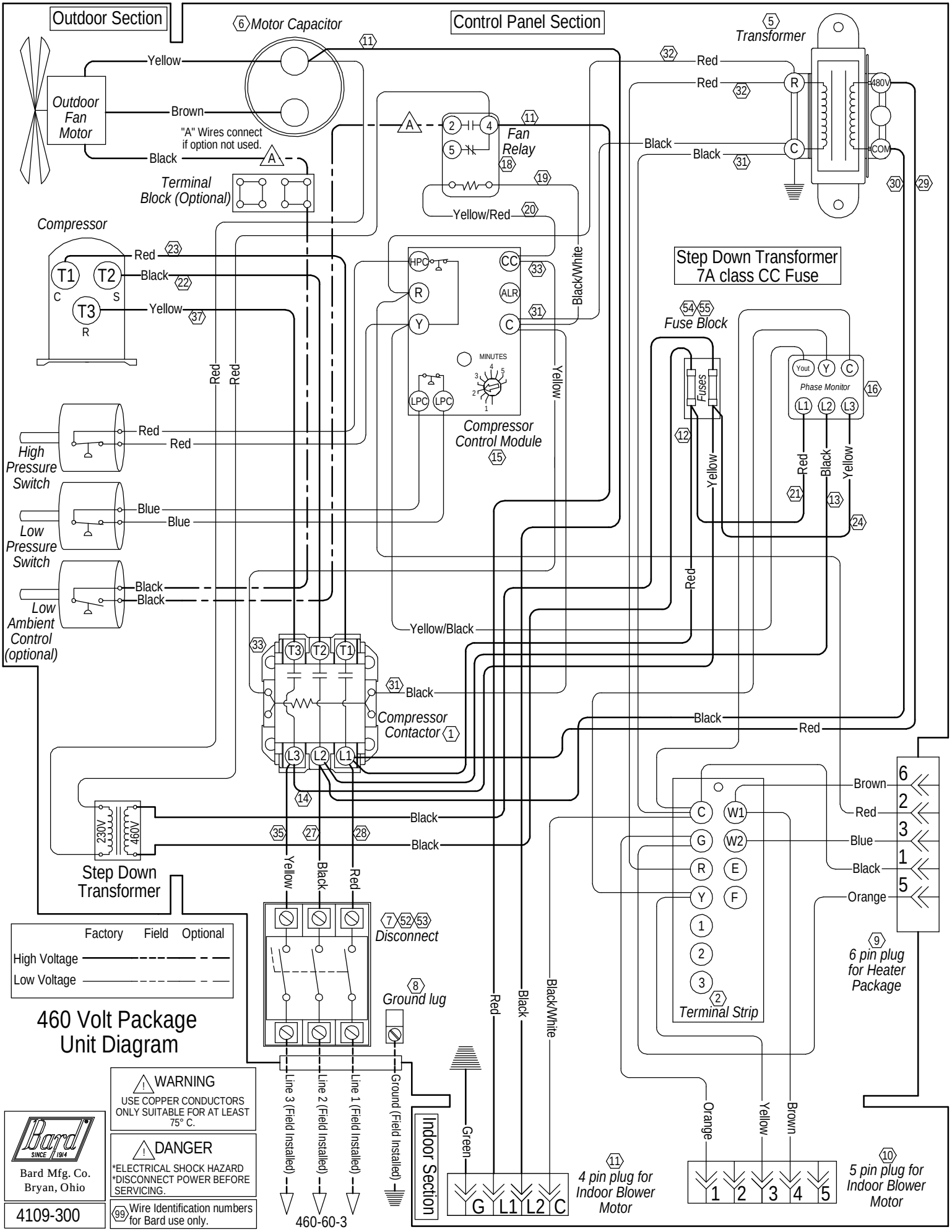
Outdoor Section
Control Panel Section
Motor Capacitor
Transformer
Outdoor Fan Motor
Yellow
Brown
Black
"A" Wires connect if option not used.
Terminal Block (Optional)
Fan Relay
Yellow/Red
Compressor
Red
Black
Yellow
T1
T2
T3
C
S
R
HPC
CC
ALR
Y
MINUTES
LPC
Compressor Control Module
Black/White
Step Down Transformer 7A class CC Fuse
Fuse Block
Fuses
Yout
Phase Monitor
L1
L2
L3
High Pressure Switch
Low Pressure Switch
Low Ambient Control (optional)
Blue
Yellow/Black
Compressor Contactor
Step Down Transformer
230V
460V
Disconnect
Ground lug
Terminal Strip
6 pin plug for Heater Package
Factory
Field
Optional
High Voltage
Low Voltage
460 Volt Package Unit Diagram
WARNING
USE COPPER CONDUCTORS ONLY SUITABLE FOR AT LEAST 75° C.
DANGER
*ELECTRICAL SHOCK HAZARD
*DISCONNECT POWER BEFORE SERVICING.
Wire Identification numbers for Bard use only.
Bard Mfg. Co.
Bryan, Ohio
4109-300
Line 3 (Field Installed)
Line 2 (Field Installed)
Line 1 (Field Installed)
Ground (Field Installed)
460-60-3
Indoor Section
Green
G
L1
L2
C
4 pin plug for Indoor Blower Motor
Orange
Brown
5 pin plug for Indoor Blower Motor