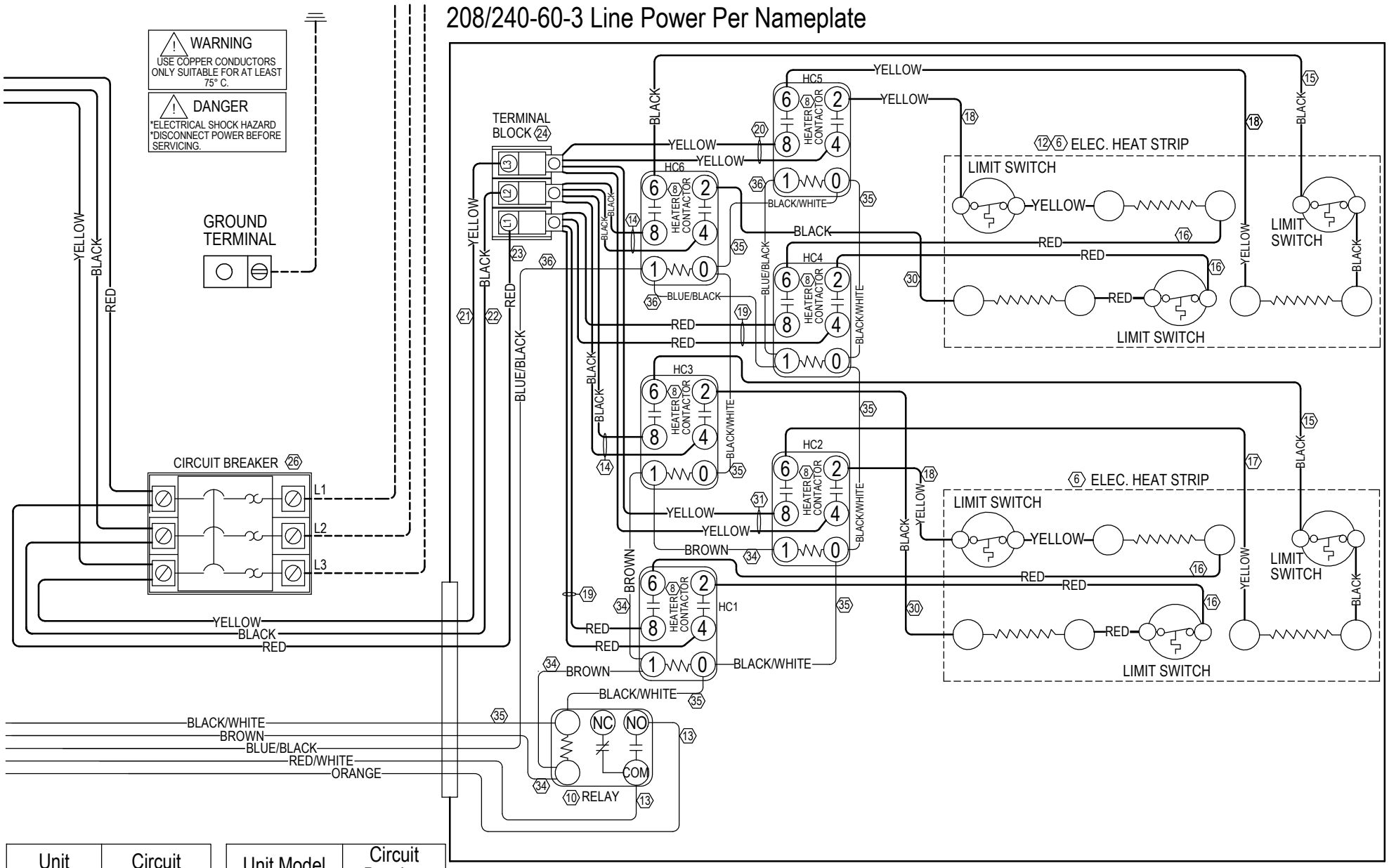

Unit Model Number	Circuit Breaker Size
I36H1-B15	60A
I42H1-B15	60A
I48H1-B15	60A
I60H1-B15	60A
I48H1-B18	60A

Unit Model Number	Circuit Breaker Size
I30A1DB15	60A
I36A1DB15	60A
I42A1DB15	60A
I48A1DB15	60A
I48A1DB18	60A
I60A1DB15	60A
I60A1DB18	60A

Unit Model Number	Circuit Breaker Size
I36Z1-B15	60A
I48Z1-B15	60A
I48Z1-B18	60A
I60Z1-B15	60A

2 THIS WIRE IS TAPED-OFF IN LOW VOLTAGE TERMINAL BOX. SEE LOW VOLTAGE WIRING SECTION IN INSTALLATION MANUAL.

1 FOR 208 VOLT OPERATION, MOVE THIS RED WIRE TO 208 VOLT TRANSFORMER TAP

99 Wire Identification numbers for Bard use only.

	Factory	Field	Optional
High Voltage			
Low Voltage			

4203-202 C