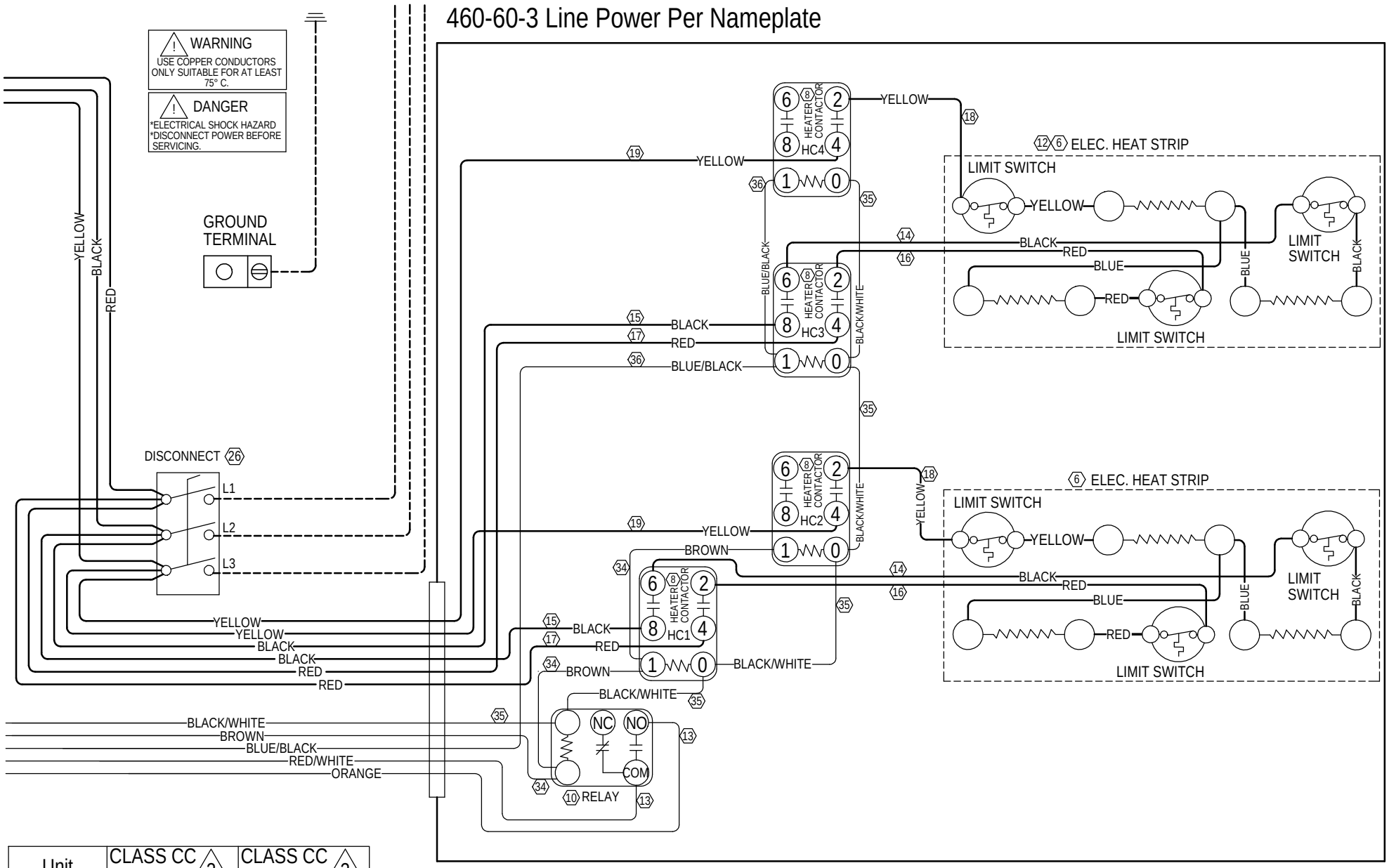


| Unit Model Number | CLASS CC Stepdown Transformer Fuse-W/Vent 2 | CLASS CC Stepdown Transformer Fuse-No Vent 2 |
|---|---|---|
| I36H1-C15 | 7A | 5A |
| I42H1-C15 | 7A | 5A |
| I48H1-C15<br>I48H1-C18 | 7A | 5A |
| I60H1-C15<br>I60H1-C18 | 10A | 7A |

2 THIS WIRE IS TAPED-OFF IN LOW VOLTAGE TERMINAL BOX. SEE LOW VOLTAGE WIRING SECTION IN INSTALLATION MANUAL.

1 FOR 208 VOLT OPERATION, MOVE THIS RED WIRE TO 208 VOLT TRANSFORMER TAP

99 Wire Identification numbers for Bard use only.

| | Factory | Field | Optional |
|---|---|---|---|
| High Voltage | | | |
| Low Voltage | | | |

Bard SINCE 1914
Bard Mfg. Co.
Bryan, Ohio
4203-302 B