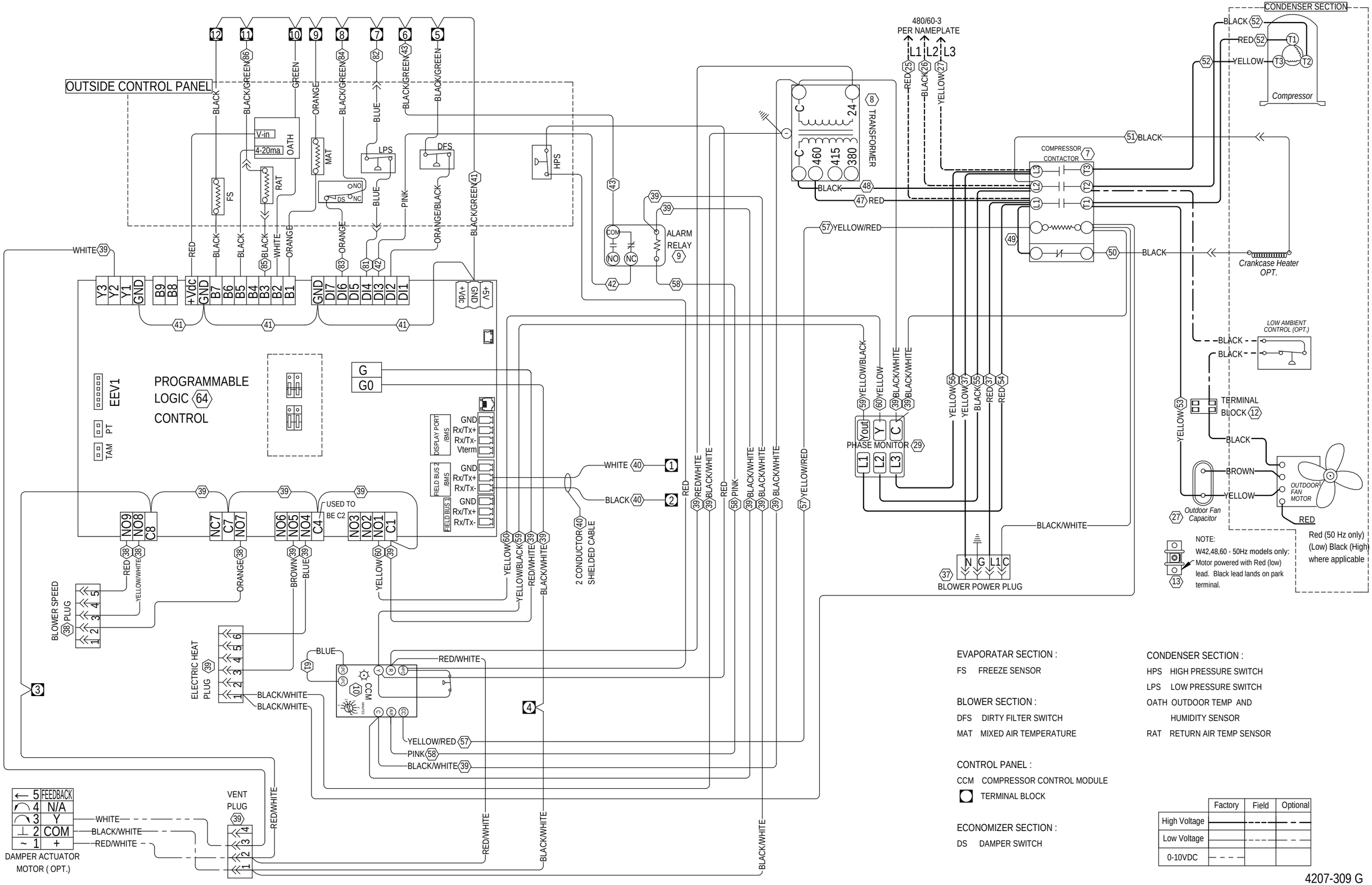

EVAPORATAR SECTION :

FS FREEZE SENSOR

BLOWER SECTION :

DFS DIRTY FILTER SWITCH

MAT MIXED AIR TEMPERATURE

CONTROL PANEL :

CCM COMPRESSOR CONTROL MODULE

TERMINAL BLOCK

ECONOMIZER SECTION :

DS DAMPER SWITCH

CONDENSER SECTION :

HPS HIGH PRESSURE SWITCH

LPS LOW PRESSURE SWITCH

OATH OUTDOOR TEMP AND HUMIDITY SENSOR

RAT RETURN AIR TEMP SENSOR

	Factory	Field	Optional
High Voltage	———	- - - -	— - —
Low Voltage	———	- - - -	— - —
0-10VDC	— - —		

4207-309 G