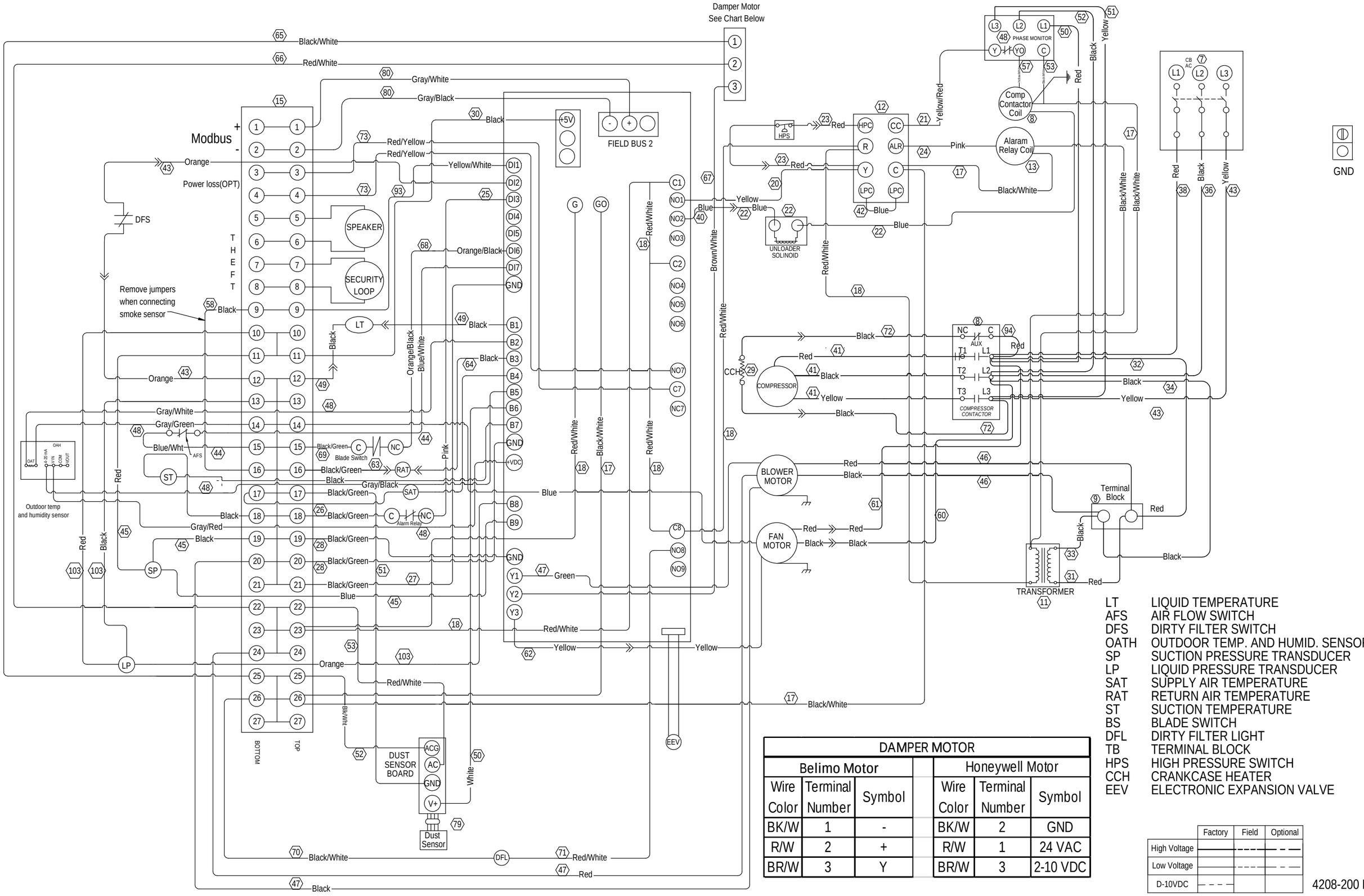

DAMPER MOTOR					
Belimo Motor			Honeywell Motor		
Wire Color	Terminal Number	Symbol	Wire Color	Terminal Number	Symbol
BK/W	1	-	BK/W	2	GND
R/W	2	+	R/W	1	24 VAC
BR/W	3	Y	BR/W	3	2-10 VDC

LT	LIQUID TEMPERATURE
AFS	AIR FLOW SWITCH
DFS	DIRTY FILTER SWITCH
OATH	OUTDOOR TEMP. AND HUMID. SENSOR
SP	SUCTION PRESSURE TRANSDUCER
LP	LIQUID PRESSURE TRANSDUCER
SAT	SUPPLY AIR TEMPERATURE
RAT	RETURN AIR TEMPERATURE
ST	SUCTION TEMPERATURE
BS	BLADE SWITCH
DFL	DIRTY FILTER LIGHT
TB	TERMINAL BLOCK
HPS	HIGH PRESSURE SWITCH
CCH	CRANKCASE HEATER
EEV	ELECTRONIC EXPANSION VALVE

	Factory	Field	Optional
High Voltage	———	- - - -	— — —
Low Voltage	———	- - - -	— — —
D-10VDC	— — —		

4208-200 H