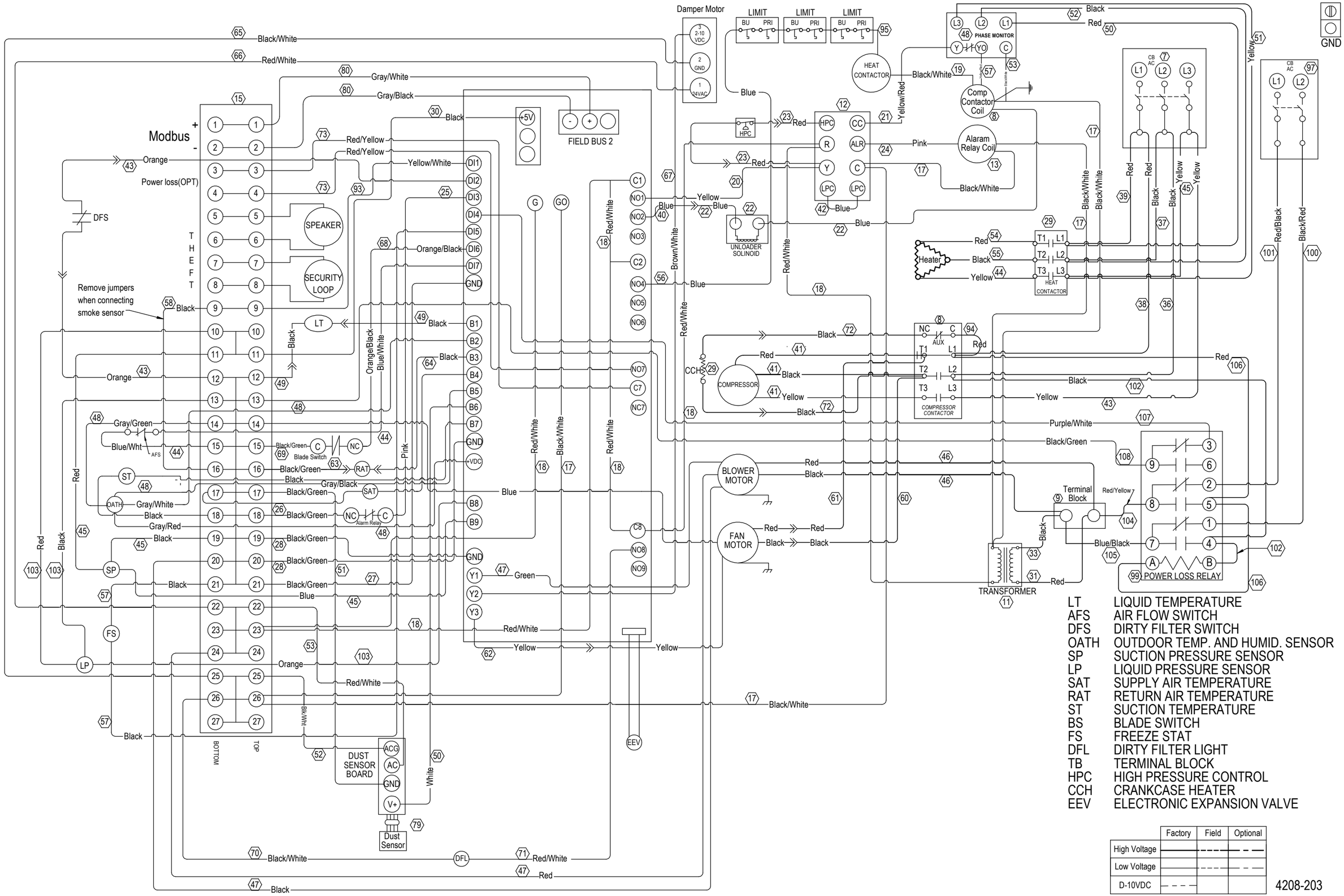

LT	LIQUID TEMPERATURE
AFS	AIR FLOW SWITCH
DFS	DIRTY FILTER SWITCH
OATH	OUTDOOR TEMP. AND HUMID. SENSOR
SP	SUCTION PRESSURE SENSOR
LP	LIQUID PRESSURE SENSOR
SAT	SUPPLY AIR TEMPERATURE
RAT	RETURN AIR TEMPERATURE
ST	SUCTION TEMPERATURE
BS	BLADE SWITCH
FS	FREEZE STAT
DFL	DIRTY FILTER LIGHT
TB	TERMINAL BLOCK
HPC	HIGH PRESSURE CONTROL
CCH	CRANKCASE HEATER
EEV	ELECTRONIC EXPANSION VALVE

	Factory	Field	Optional
High Voltage	———	- - - -	— - —
Low Voltage		- - - -	— - —
D-10VDC	— - - —		

4208-203