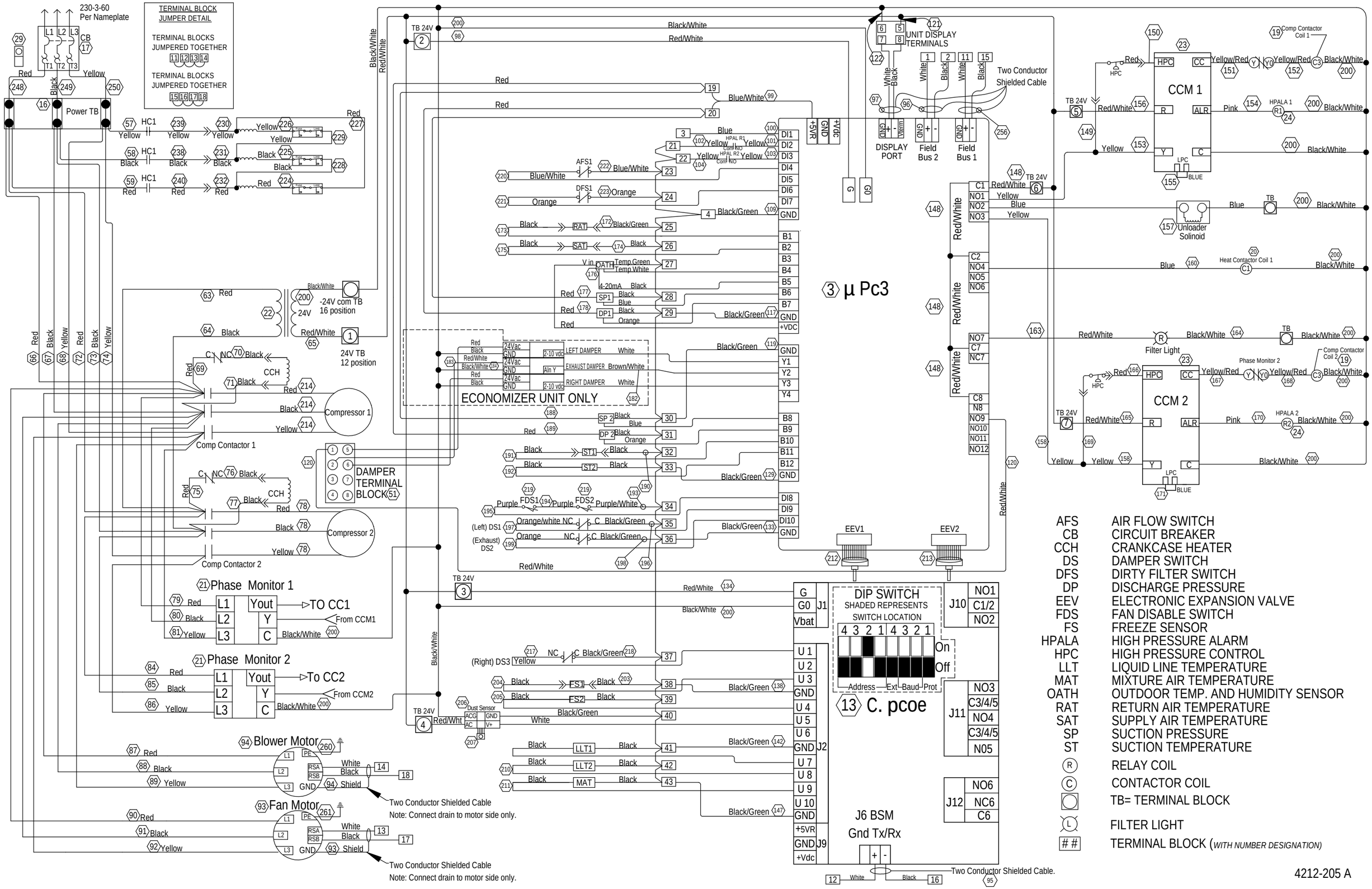
230-3-60
Per Nameplate
TERMINAL BLOCK
JUMPER DETAIL
TERMINAL BLOCKS
JUMPERED TOGETHER
TERMINAL BLOCKS
JUMPERED TOGETHER
Power TB
CB
HC1
-24V com TB
16 position
24V TB
12 position
Compressor 1
Comp Contactor 1
Compressor 2
Comp Contactor 2
DAMPER
TERMINAL
BLOCK
Phase Monitor 1
TO CC1
From CCM1
Phase Monitor 2
To CC2
From CCM2
Blower Motor
Fan Motor
Two Conductor Shielded Cable
Note: Connect drain to motor side only.
ECONOMIZER UNIT ONLY
LEFT DAMPER
EXHAUST DAMPER
RIGHT DAMPER
AFS1
DFS1
RAT
SAT
OATH
SP1
DP1
SP 2
DP 2
ST1
ST2
FDS1
FDS2
(Left) DS1
(Exhaust) DS2
(Right) DS3
FS1
FS2
LLT1
LLT2
MAT
Dust Sensor
3 µ Pc3
UNIT DISPLAY
TERMINALS
DISPLAY
PORT
Field
Bus 2
Field
Bus 1
Two Conductor
Shielded Cable
CCM 1
CCM 2
Comp Contactor
Coil 1
Comp Contactor
Coil 2
Heat Contactor Coil 1
Unloader
Solinoid
Filter Light
Phase Monitor 2
HPALA 1
HPALA 2
EEV1
EEV2
DIP SWITCH
SHADED REPRESENTS
SWITCH LOCATION
Address
Ext
Baud
Prot
13 C. pcoe
J6 BSM
Gnd Tx/Rx
Two Conductor Shielded Cable.
AFS AIR FLOW SWITCH
CB CIRCUIT BREAKER
CCH CRANKCASE HEATER
DS DAMPER SWITCH
DFS DIRTY FILTER SWITCH
DP DISCHARGE PRESSURE
EEV ELECTRONIC EXPANSION VALVE
FDS FAN DISABLE SWITCH
FS FREEZE SENSOR
HPALA HIGH PRESSURE ALARM
HPC HIGH PRESSURE CONTROL
LLT LIQUID LINE TEMPERATURE
MAT MIXTURE AIR TEMPERATURE
OATH OUTDOOR TEMP. AND HUMIDITY SENSOR
RAT RETURN AIR TEMPERATURE
SAT SUPPLY AIR TEMPERATURE
SP SUCTION PRESSURE
ST SUCTION TEMPERATURE
RELAY COIL
CONTACTOR COIL
TB= TERMINAL BLOCK
FILTER LIGHT
TERMINAL BLOCK (WITH NUMBER DESIGNATION)
4212-205 A