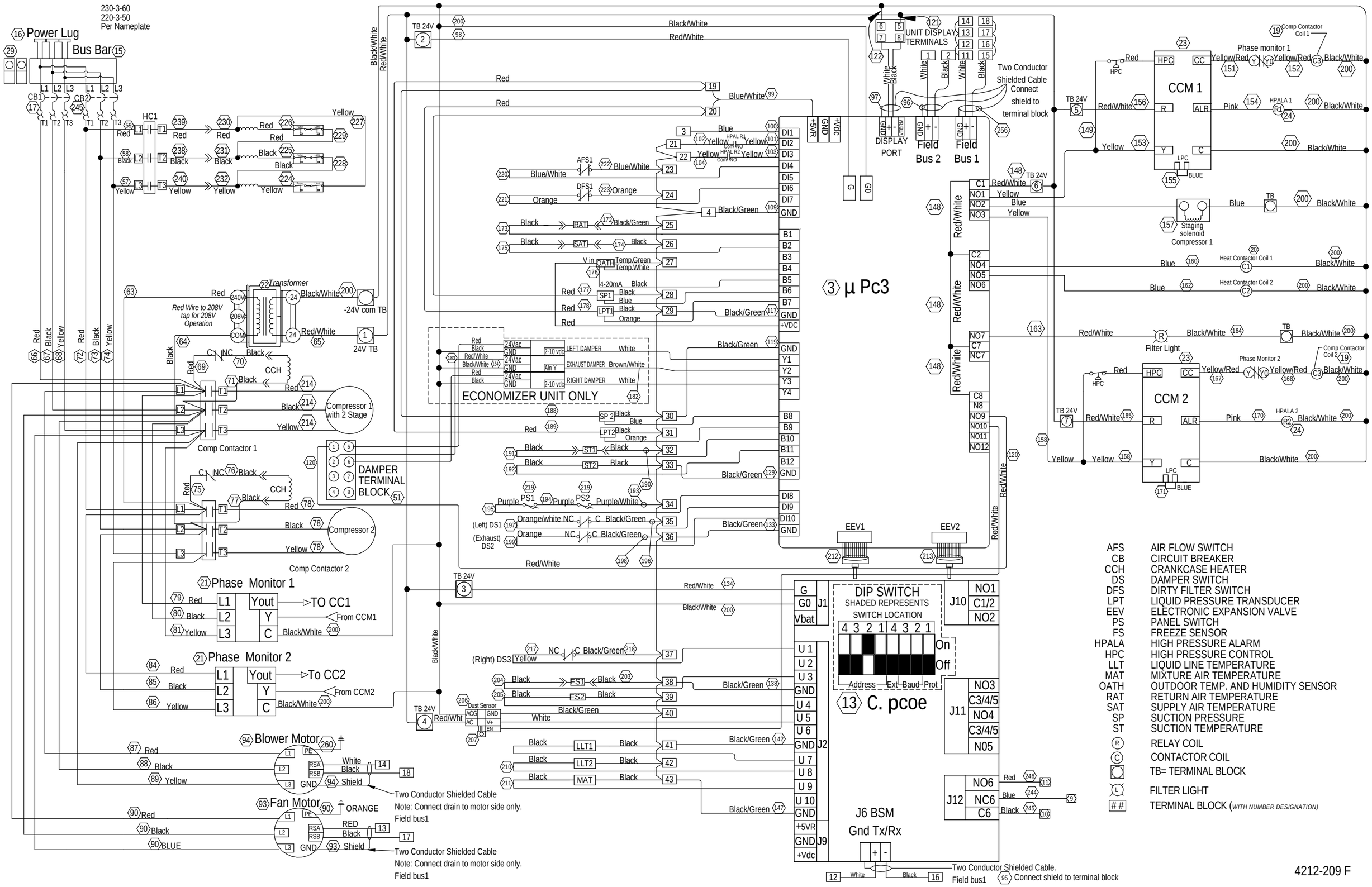
230-3-60
220-3-50
Per Nameplate
Power Lug
Bus Bar
CB1
CB2
HC1
Transformer
Red Wire to 208V tap for 208V Operation
-24V com TB
24V TB
Comp Contactor 1
Compressor 1 with 2 Stage
Comp Contactor 2
Compressor 2
DAMPER TERMINAL BLOCK
Phase Monitor 1
TO CC1
From CCM1
Phase Monitor 2
To CC2
From CCM2
Blower Motor
Fan Motor
Two Conductor Shielded Cable
Note: Connect drain to motor side only.
Field bus1
ECONOMIZER UNIT ONLY
LEFT DAMPER
EXHAUST DAMPER
RIGHT DAMPER
3 µ Pc3
UNIT DISPLAY TERMINALS
DISPLAY PORT
Field Bus 2
Field Bus 1
Two Conductor Shielded Cable Connect shield to terminal block
CCM 1
CCM 2
Phase monitor 1
Phase Monitor 2
Comp Contactor Coil 1
Comp Contactor Coil 2
Staging solenoid Compressor 1
Heat Contactor Coil 1
Heat Contactor Coil 2
Filter Light
EEV1
EEV2
DIP SWITCH
SHADED REPRESENTS SWITCH LOCATION
13 C. pcoe
J6 BSM
Gnd Tx/Rx
Two Conductor Shielded Cable.
Field bus1
Connect shield to terminal block
AFS AIR FLOW SWITCH
CB CIRCUIT BREAKER
CCH CRANKCASE HEATER
DS DAMPER SWITCH
DFS DIRTY FILTER SWITCH
LPT LIQUID PRESSURE TRANSDUCER
EEV ELECTRONIC EXPANSION VALVE
PS PANEL SWITCH
FS FREEZE SENSOR
HPALA HIGH PRESSURE ALARM
HPC HIGH PRESSURE CONTROL
LLT LIQUID LINE TEMPERATURE
MAT MIXTURE AIR TEMPERATURE
OATH OUTDOOR TEMP. AND HUMIDITY SENSOR
RAT RETURN AIR TEMPERATURE
SAT SUPPLY AIR TEMPERATURE
SP SUCTION PRESSURE
ST SUCTION TEMPERATURE
RELAY COIL
CONTACTOR COIL
TB= TERMINAL BLOCK
FILTER LIGHT
TERMINAL BLOCK (WITH NUMBER DESIGNATION)
4212-209 F