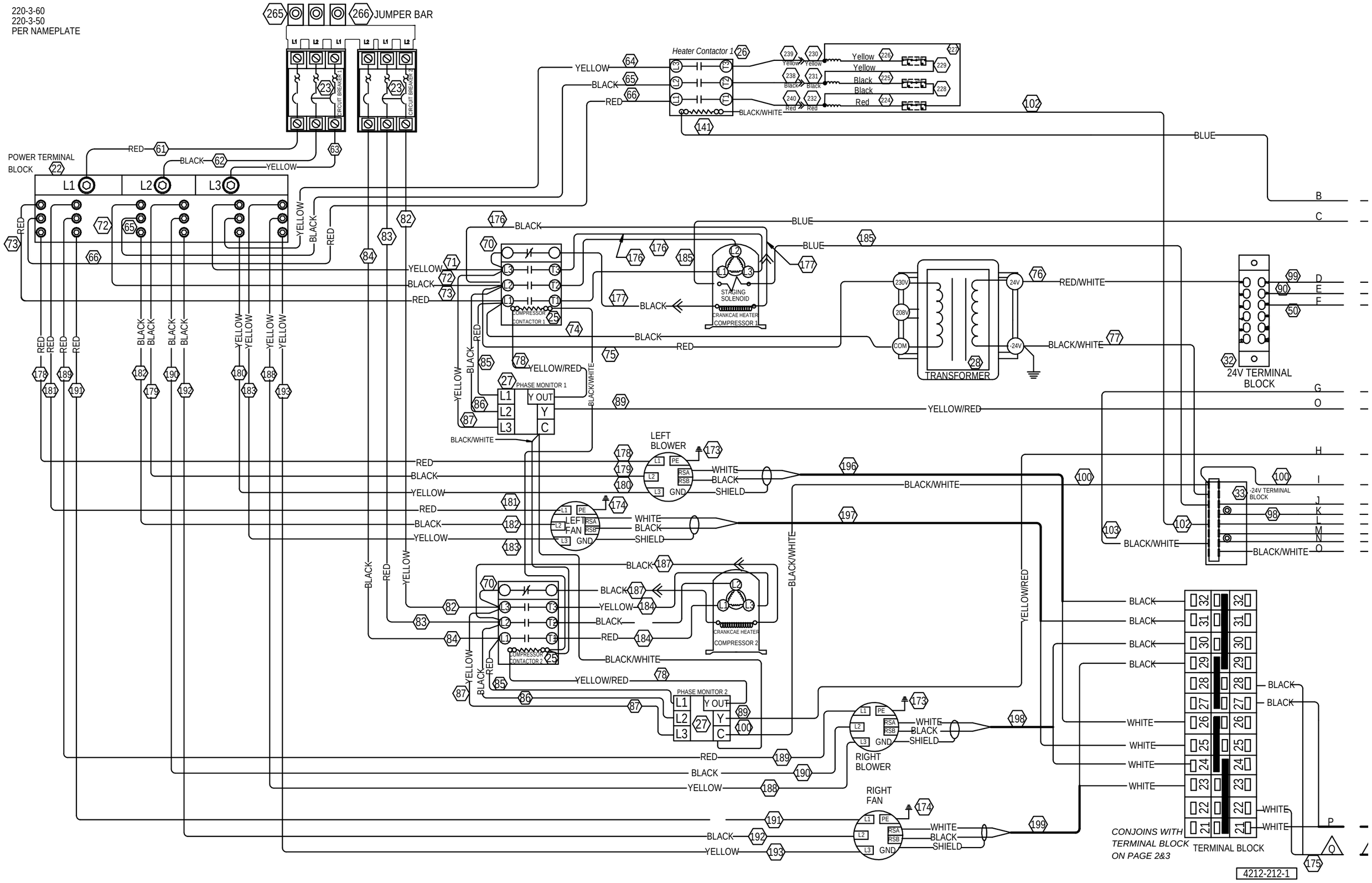
220-3-60
220-3-50
PER NAMEPLATE
JUMPER BAR
CIRCUIT BREAKER 1
CIRCUIT BREAKER 2
POWER TERMINAL BLOCK
L1
L2
L3
Heater Contactor 1
Yellow
Black
Red
BLACK/WHITE
BLUE
STAGING SOLENOID
CRANKCAE HEATER
COMPRESSOR 1
COMPRESSOR CONTACTOR 1
COMPRESSOR CONTACTOR 2
COMPRESSOR 2
PHASE MONITOR 1
PHASE MONITOR 2
Y OUT
Y
C
YELLOW/RED
RED/WHITE
230V
208V
COM
24V
-24V
TRANSFORMER
24V TERMINAL BLOCK
-24V TERMINAL BLOCK
LEFT BLOWER
LEFT FAN
RIGHT BLOWER
RIGHT FAN
PE
RSA
RSB
GND
WHITE
SHIELD
TERMINAL BLOCK
CONJOINS WITH TERMINAL BLOCK ON PAGE 2&3
4212-212-1

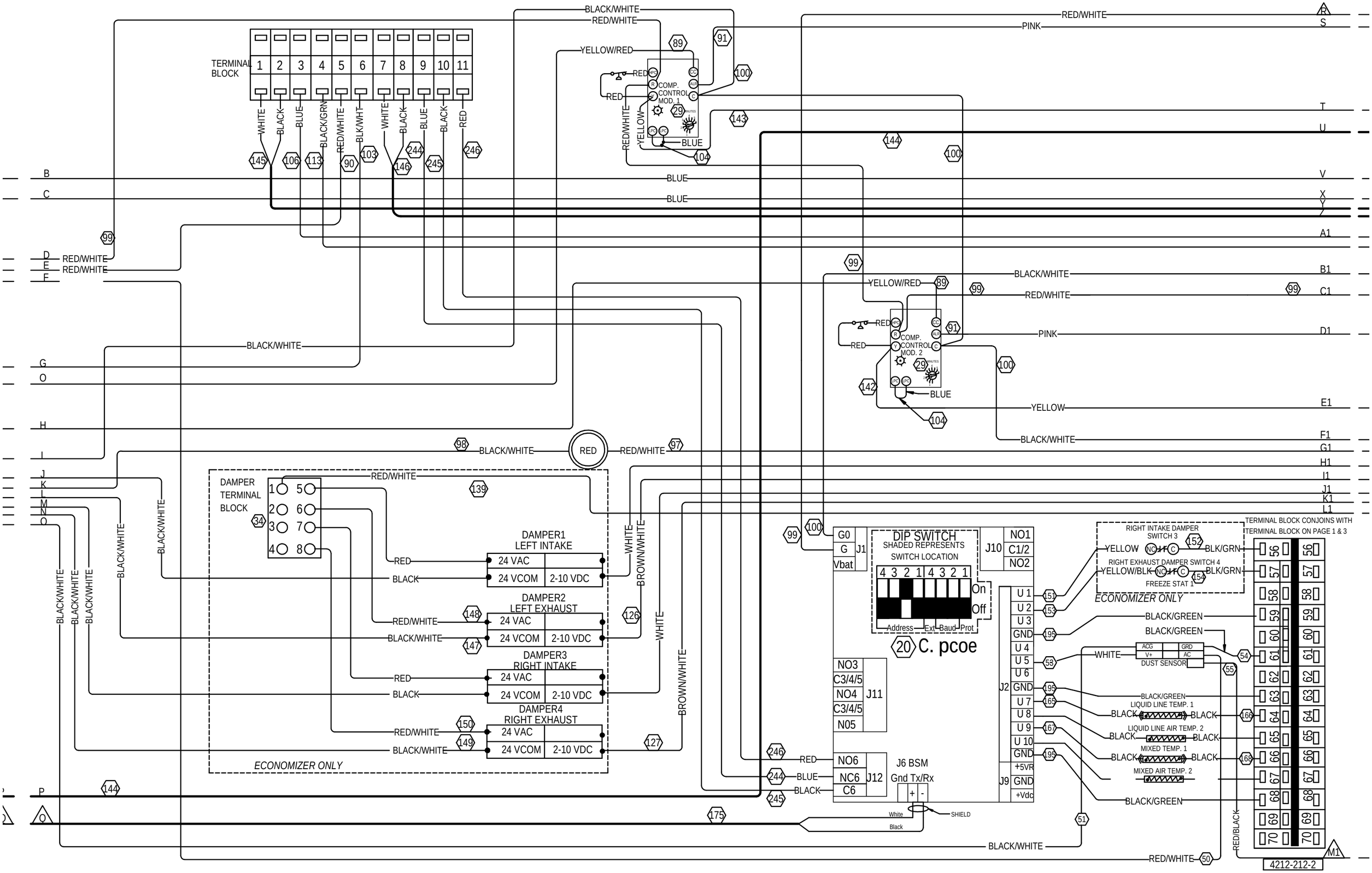
TERMINAL BLOCK
1 2 3 4 5 6 7 8 9 10 11
WHITE
BLACK
BLUE
BLACK/GRN
RED/WHITE
BLK/WHT
WHITE
BLACK
BLUE
BLACK
RED
COMP. CONTROL MOD. 1
COMP. CONTROL MOD. 2
DAMPER TERMINAL BLOCK
DAMPER1 LEFT INTAKE
DAMPER2 LEFT EXHAUST
DAMPER3 RIGHT INTAKE
DAMPER4 RIGHT EXHAUST
24 VAC
24 VCOM
2-10 VDC
ECONOMIZER ONLY
DIP SWITCH
SHADED REPRESENTS SWITCH LOCATION
Address Ext Baud Prot
On
Off
20 C. pcoe
J1 G0 G Vbat
J10 NO1 C1/2 NO2
J11 NO3 C3/4/5 NO4 C3/4/5 N05
J12 NO6 NC6 C6
J6 BSM
Gnd Tx/Rx
SHIELD
J2 U 1 U 2 U 3 GND U 4 U 5 U 6 GND U 7 U 8 U 9 U 10 GND
J9 +5VR GND +Vdc
RIGHT INTAKE DAMPER SWITCH 3
RIGHT EXHAUST DAMPER SWITCH 4
FREEZE STAT 1
YELLOW
YELLOW/BLK
BLK/GRN
ECONOMIZER ONLY
DUST SENSOR
ACG V+ GRD AC
LIQUID LINE TEMP. 1
LIQUID LINE AIR TEMP. 2
MIXED TEMP. 1
MIXED AIR TEMP. 2
TERMINAL BLOCK CONJOINS WITH TERMINAL BLOCK ON PAGE 1 & 3
4212-212-2

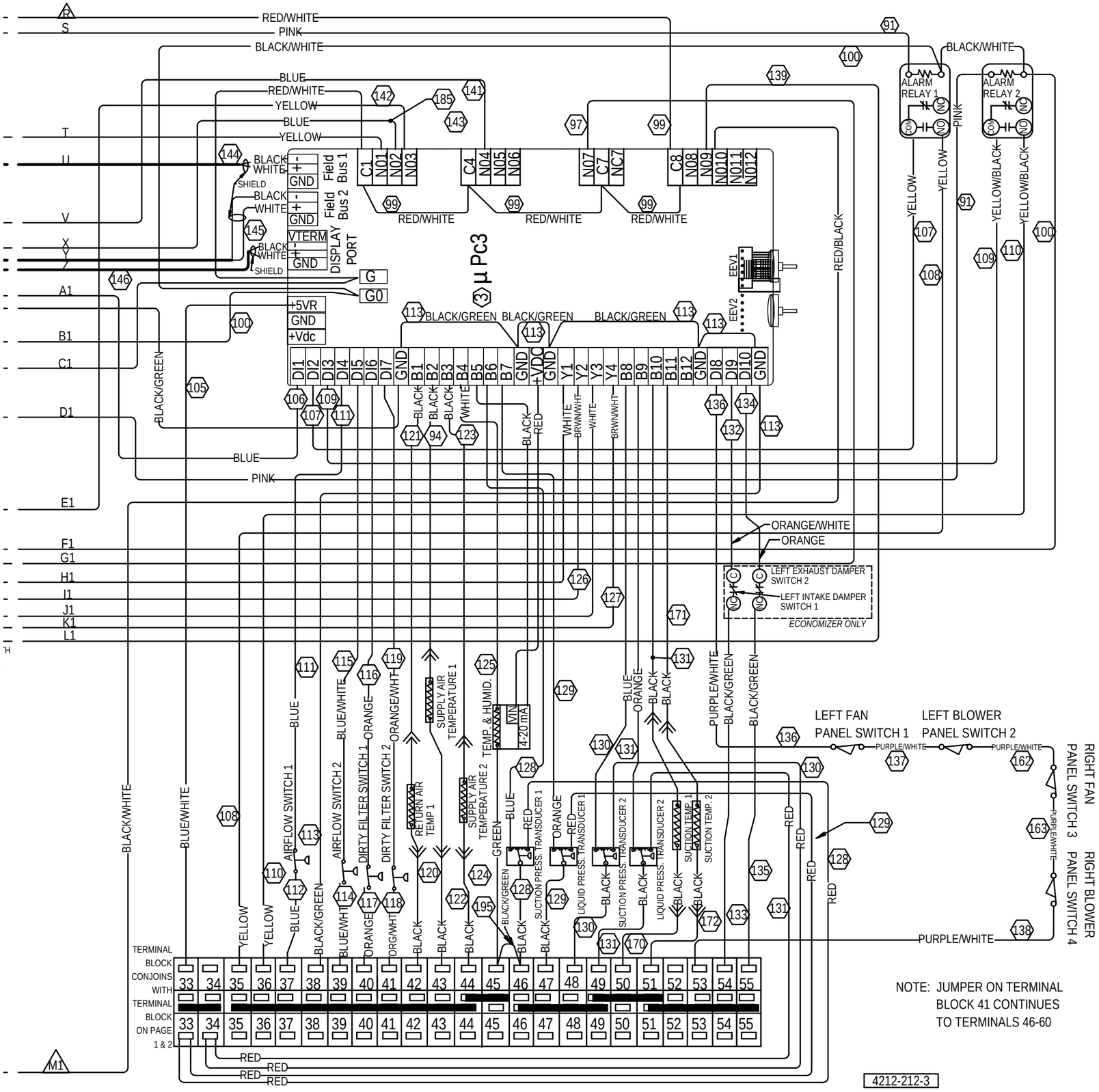
RED/WHITE
PINK
BLACK/WHITE
BLUE
YELLOW
ALARM RELAY 1
ALARM RELAY 2
Field Bus 1
Field Bus 2
DISPLAY PORT
VTERM
GND
SHIELD
µ Pc3
EEV1
EEV2
+5VR
+Vdc
BLACK/GREEN
RED/BLACK
YELLOW/BLACK
ORANGE/WHITE
ORANGE
LEFT EXHAUST DAMPER SWITCH 2
LEFT INTAKE DAMPER SWITCH 1
ECONOMIZER ONLY
AIRFLOW SWITCH 1
AIRFLOW SWITCH 2
DIRTY FILTER SWITCH 1
DIRTY FILTER SWITCH 2
RETURN AIR TEMP 1
SUPPLY AIR TEMPERATURE 1
SUPPLY AIR TEMPERATURE 2
TEMP. & HUMID.
V/IN
4-20 mA
SUCTION PRESS. TRANSDUCER 1
LIQUID PRESS. TRANSDUCER 1
SUCTION PRESS. TRANSDUCER 2
LIQUID PRESS. TRANSDUCER 2
SUCTION TEMP. 1
SUCTION TEMP. 2
LEFT FAN PANEL SWITCH 1
LEFT BLOWER PANEL SWITCH 2
RIGHT FAN PANEL SWITCH 3
RIGHT BLOWER PANEL SWITCH 4
PURPLE/WHITE
TERMINAL BLOCK CONJOINS WITH TERMINAL BLOCK ON PAGE 1 & 2
NOTE: JUMPER ON TERMINAL BLOCK 41 CONTINUES TO TERMINALS 46-60
4212-212-3