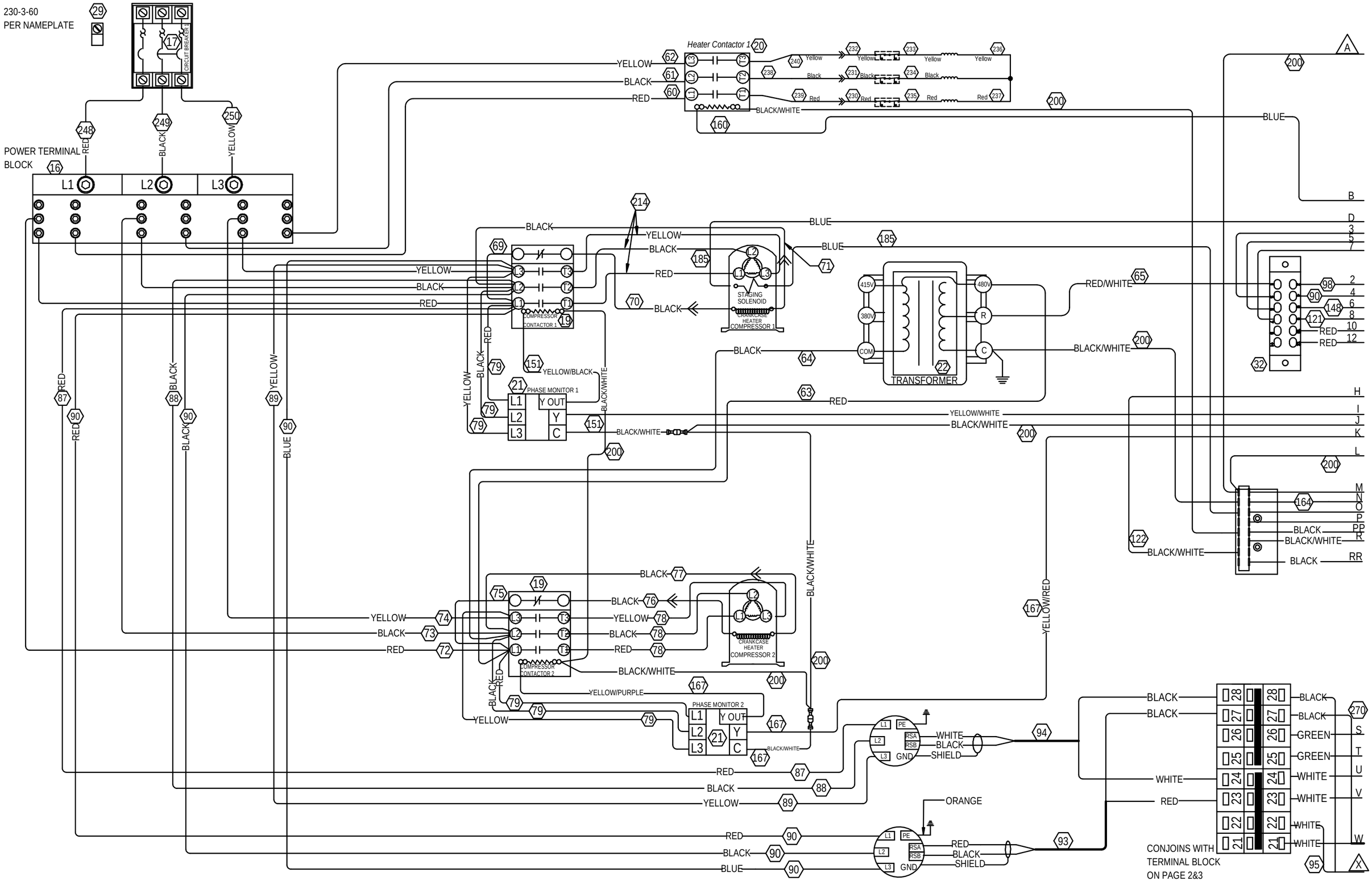
230-3-60
PER NAMEPLATE
CIRCUIT BREAKER
POWER TERMINAL BLOCK
L1
L2
L3
Heater Contactor 1
YELLOW
BLACK
RED
BLACK/WHITE
BLUE
COMPRESSOR CONTACTOR 1
STAGING SOLENOID
CRANKCASE HEATER COMPRESSOR 1
TRANSFORMER
RED/WHITE
BLACK/WHITE
YELLOW/BLACK
PHASE MONITOR 1
Y OUT
YELLOW/WHITE
COMPRESSOR CONTACTOR 2
CRANKCASE HEATER COMPRESSOR 2
YELLOW/PURPLE
PHASE MONITOR 2
WHITE
SHIELD
GND
ORANGE
YELLOW/RED
CONJOINS WITH TERMINAL BLOCK ON PAGE 2&3
4212-218-1 A

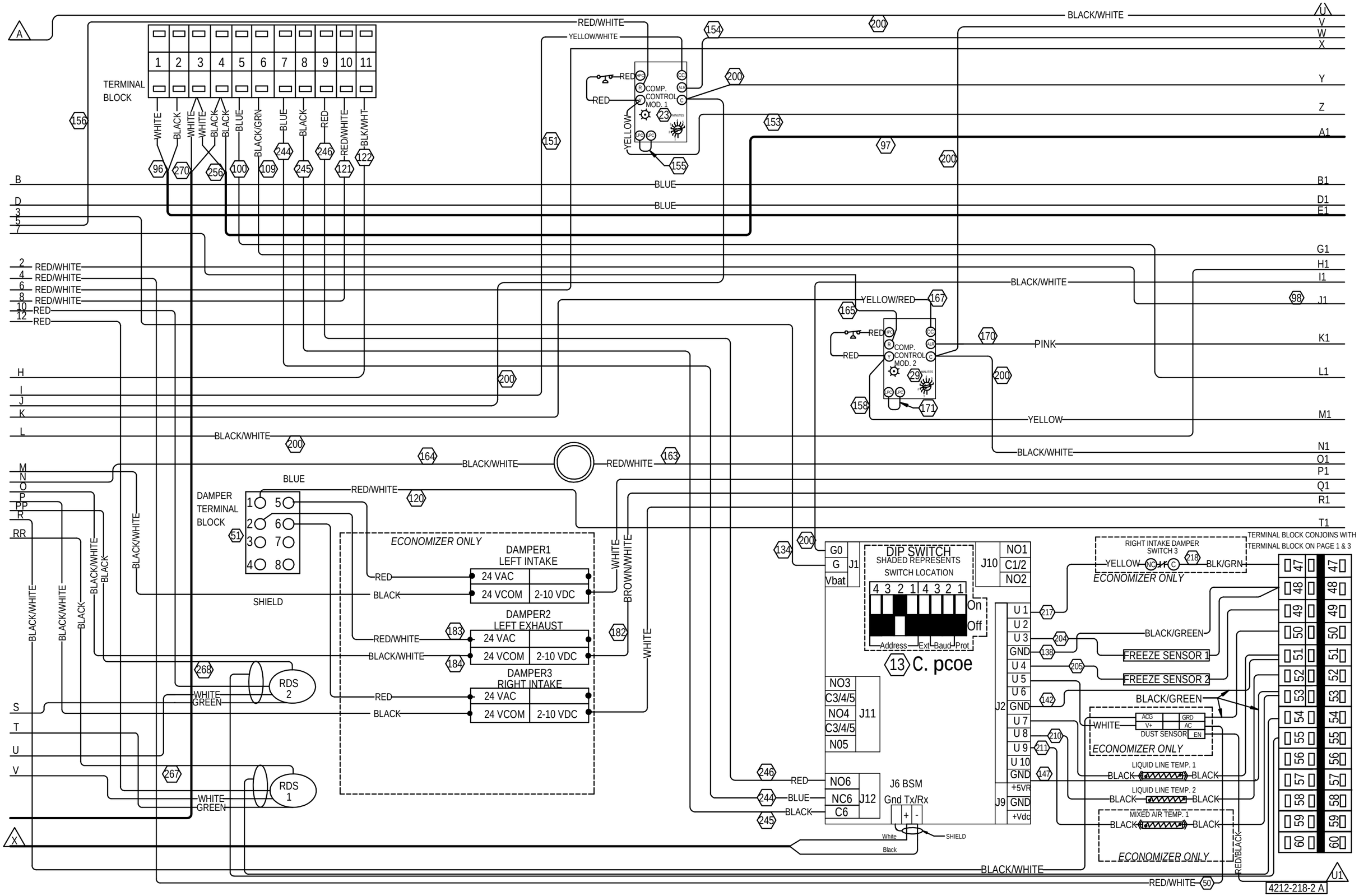
TERMINAL BLOCK
1 2 3 4 5 6 7 8 9 10 11
WHITE
BLACK
WHITE
WHITE
BLACK
BLACK
BLUE
BLACK/GRN
BLUE
BLACK
RED
RED/WHITE
BLK/WHT
RED/WHITE
YELLOW/WHITE
RED
RED
COMP. CONTROL MOD. 1
YELLOW
BLUE
BLUE
BLACK/WHITE
RED/WHITE
RED/WHITE
RED/WHITE
RED/WHITE
RED
RED
YELLOW/RED
RED
RED
COMP. CONTROL MOD. 2
PINK
YELLOW
BLACK/WHITE
BLACK/WHITE
BLACK/WHITE
RED/WHITE
BLUE
RED/WHITE
DAMPER TERMINAL BLOCK
SHIELD
ECONOMIZER ONLY
DAMPER1 LEFT INTAKE
24 VAC
24 VCOM
2-10 VDC
DAMPER2 LEFT EXHAUST
DAMPER3 RIGHT INTAKE
RED
BLACK
RED/WHITE
BLACK/WHITE
WHITE
BROWN/WHITE
WHITE
RDS 2
RDS 1
WHITE
GREEN
DIP SWITCH
SHADED REPRESENTS SWITCH LOCATION
On
Off
Address Ext Baud Prot
C. pcoe
G0
G
Vbat
J1
NO3
C3/4/5
NO4
C3/4/5
N05
J11
NO6
NC6
C6
J12
J6 BSM
Gnd Tx/Rx
White
Black
SHIELD
NO1
C1/2
NO2
J10
U 1
U 2
U 3
GND
U 4
U 5
U 6
GND
U 7
U 8
U 9
U 10
GND
J2
+5VR
GND
+Vdc
J9
RIGHT INTAKE DAMPER SWITCH 3
YELLOW
BLK/GRN
ECONOMIZER ONLY
BLACK/GREEN
FREEZE SENSOR 1
FREEZE SENSOR 2
BLACK/GREEN
WHITE
DUST SENSOR
ECONOMIZER ONLY
LIQUID LINE TEMP. 1
BLACK
BLACK
LIQUID LINE TEMP. 2
BLACK
BLACK
MIXED AIR TEMP. 1
BLACK
BLACK
ECONOMIZER ONLY
TERMINAL BLOCK CONJOINS WITH TERMINAL BLOCK ON PAGE 1 & 3
RED/BLACK
BLACK/WHITE
RED/WHITE
4212-218-2 A

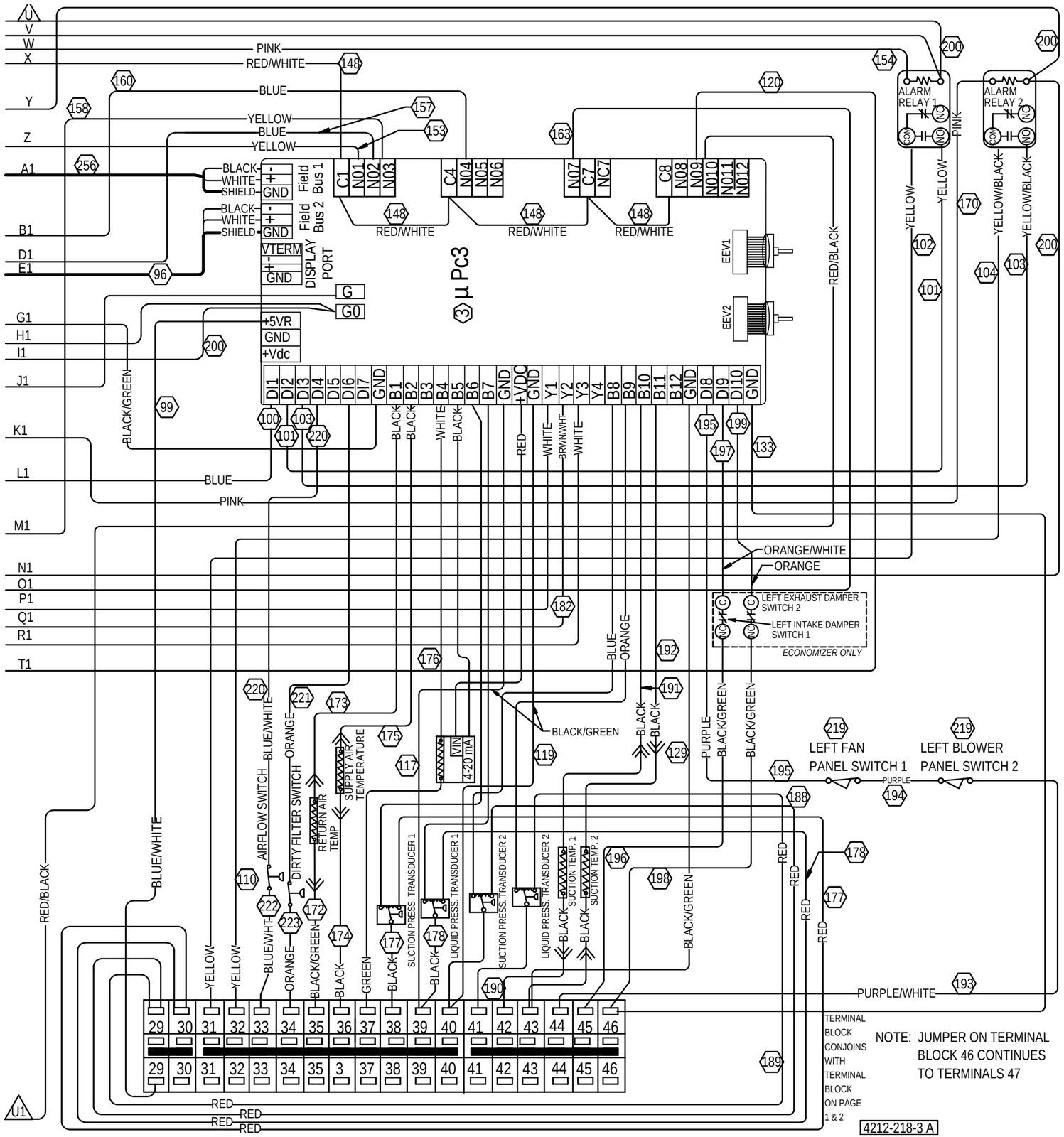
U
V
W
X
Y
Z
A1
B1
D1
E1
G1
H1
I1
J1
K1
L1
M1
N1
O1
P1
Q1
R1
T1
PINK
RED/WHITE
BLUE
YELLOW
BLACK
WHITE
SHIELD
GND
Field Bus 1
Field Bus 2
VTERM
DISPLAY PORT
G
G0
+5VR
+Vdc
µ Pc3
C1 NO1 NO2 NO3
C4 NO4 NO5 NO6
NO7 C7 NC7
C8 NO8 NO9 NO10 NO11 NO12
EEV1
EEV2
DI1 DI2 DI3 DI4 DI5 DI6 DI7 GND B1 B2 B3 B4 B5 B6 B7 GND +VDC GND Y1 Y2 Y3 Y4 B8 B9 B10 B11 B12 GND DI8 DI9 DI10 GND
ALARM RELAY 1
ALARM RELAY 2
COM
NO
BLACK/GREEN
RED/BLACK
ORANGE/WHITE
ORANGE
LEFT EXHAUST DAMPER SWITCH 2
LEFT INTAKE DAMPER SWITCH 1
ECONOMIZER ONLY
BLUE/WHITE
AIRFLOW SWITCH
DIRTY FILTER SWITCH
RETURN AIR TEMP
SUPPLY AIR TEMPERATURE
VIN
4-20 mA
SUCTION PRESS. TRANSDUCER 1
LIQUID PRESS. TRANSDUCER 1
SUCTION PRESS. TRANSDUCER 2
LIQUID PRESS. TRANSDUCER 2
SUCTION TEMP. 1
SUCTION TEMP. 2
PURPLE
BLACK/GREEN
LEFT FAN PANEL SWITCH 1
LEFT BLOWER PANEL SWITCH 2
PURPLE/WHITE
RED
29 30 31 32 33 34 35 36 37 38 39 40 41 42 43 44 45 46
29 30 31 32 33 34 35 3 37 38 39 40 41 42 43 44 45 46
TERMINAL BLOCK CONJOINS WITH TERMINAL BLOCK ON PAGE 1 & 2
NOTE: JUMPER ON TERMINAL BLOCK 46 CONTINUES TO TERMINALS 47
U1
4212-218-3 A