230-3-60
PER NAMEPLATE

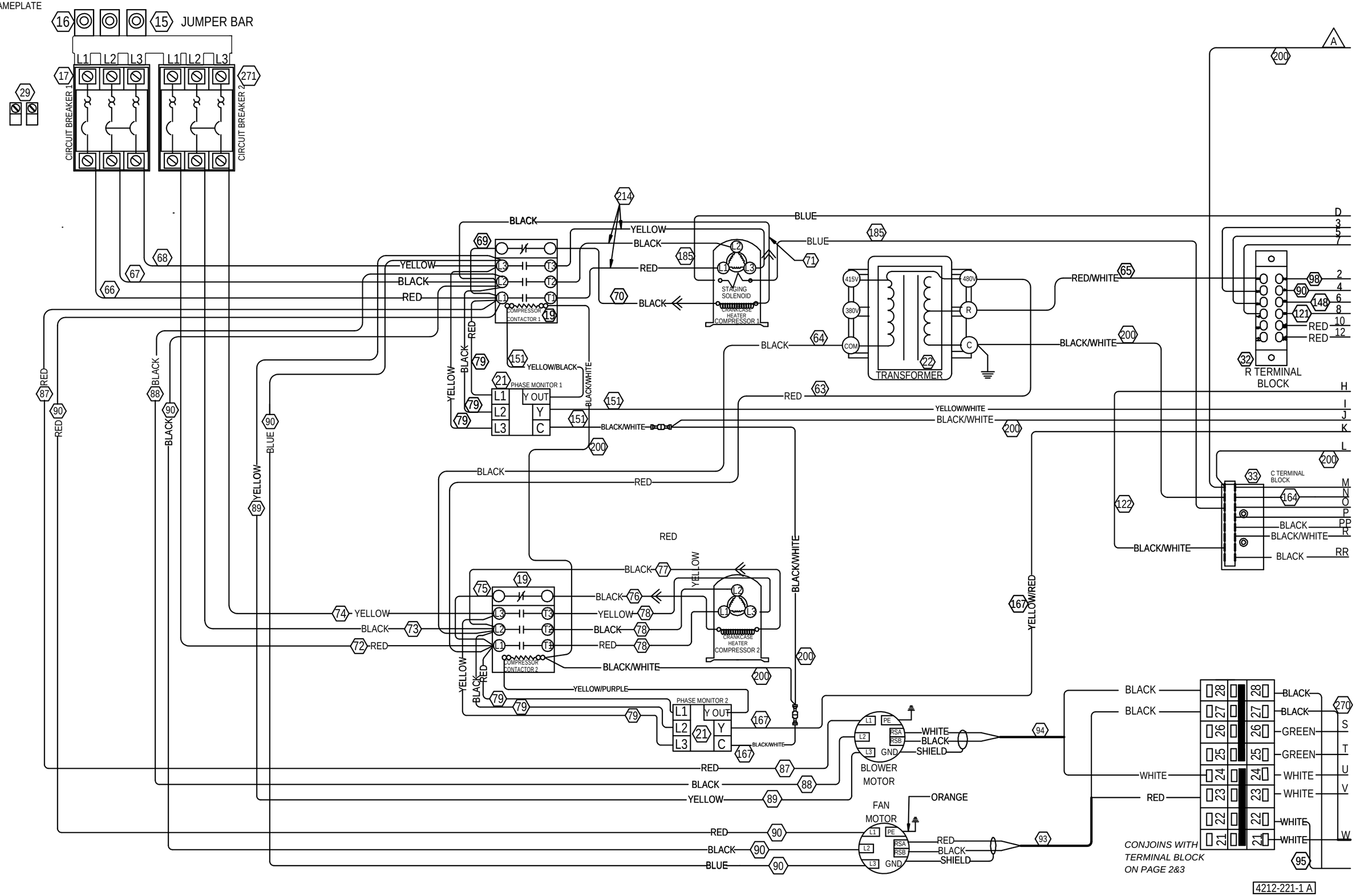

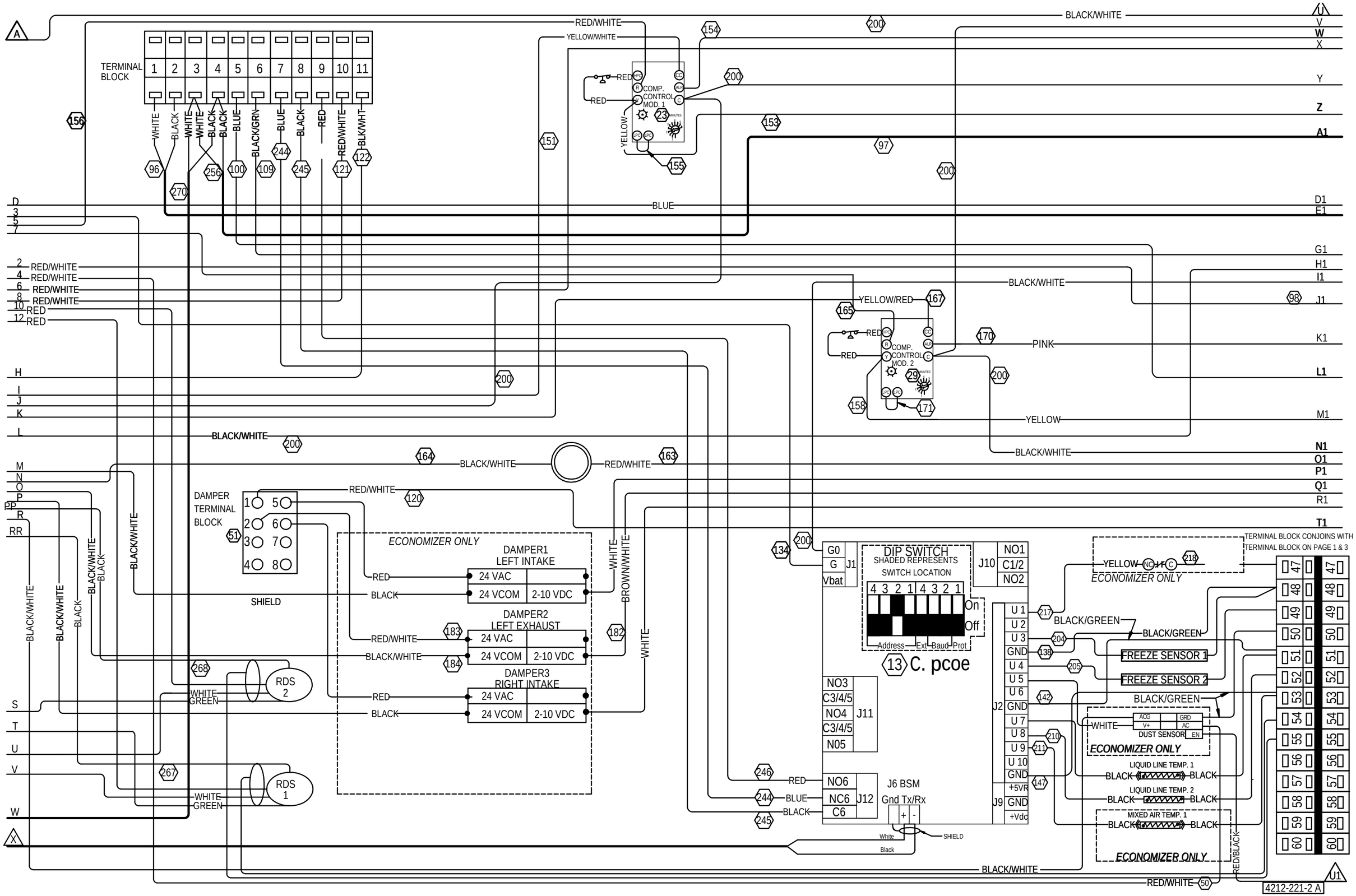
TERMINAL BLOCK
1 2 3 4 5 6 7 8 9 10 11
WHITE
BLACK
WHITE
WHITE
BLACK
BLACK
BLUE
BLACK/GRN
BLUE
BLACK
RED
RED/WHITE
BLK/WHT
RED/WHITE
YELLOW/WHITE
BLACK/WHITE
COMP. CONTROL MOD. 1
RED
YELLOW
BLUE
RED/WHITE
YELLOW/RED
COMP. CONTROL MOD. 2
PINK
YELLOW
DAMPER TERMINAL BLOCK
SHIELD
ECONOMIZER ONLY
DAMPER1 LEFT INTAKE
24 VAC
24 VCOM
2-10 VDC
DAMPER2 LEFT EXHAUST
DAMPER3 RIGHT INTAKE
WHITE
BROWN/WHITE
RDS 2
RDS 1
WHITE
GREEN
DIP SWITCH
SHADED REPRESENTS SWITCH LOCATION
On
Off
Address Ext Baud Prot
C. pcoe
G0
G
Vbat
J1
NO3
C3/4/5
NO4
C3/4/5
N05
J11
NO6
NC6
C6
J12
J6 BSM
Gnd Tx/Rx
White
Black
NO1
C1/2
NO2
J10
U 1
U 2
U 3
GND
U 4
U 5
U 6
GND
U 7
U 8
U 9
U 10
GND
J2
+5VR
GND
+Vdc
J9
BLACK/GREEN
FREEZE SENSOR 1
FREEZE SENSOR 2
DUST SENSOR
ACG
V+
GRD
AC
EN
LIQUID LINE TEMP. 1
LIQUID LINE TEMP. 2
MIXED AIR TEMP. 1
TERMINAL BLOCK CONJOINS WITH TERMINAL BLOCK ON PAGE 1 & 3
4212-221-2 A

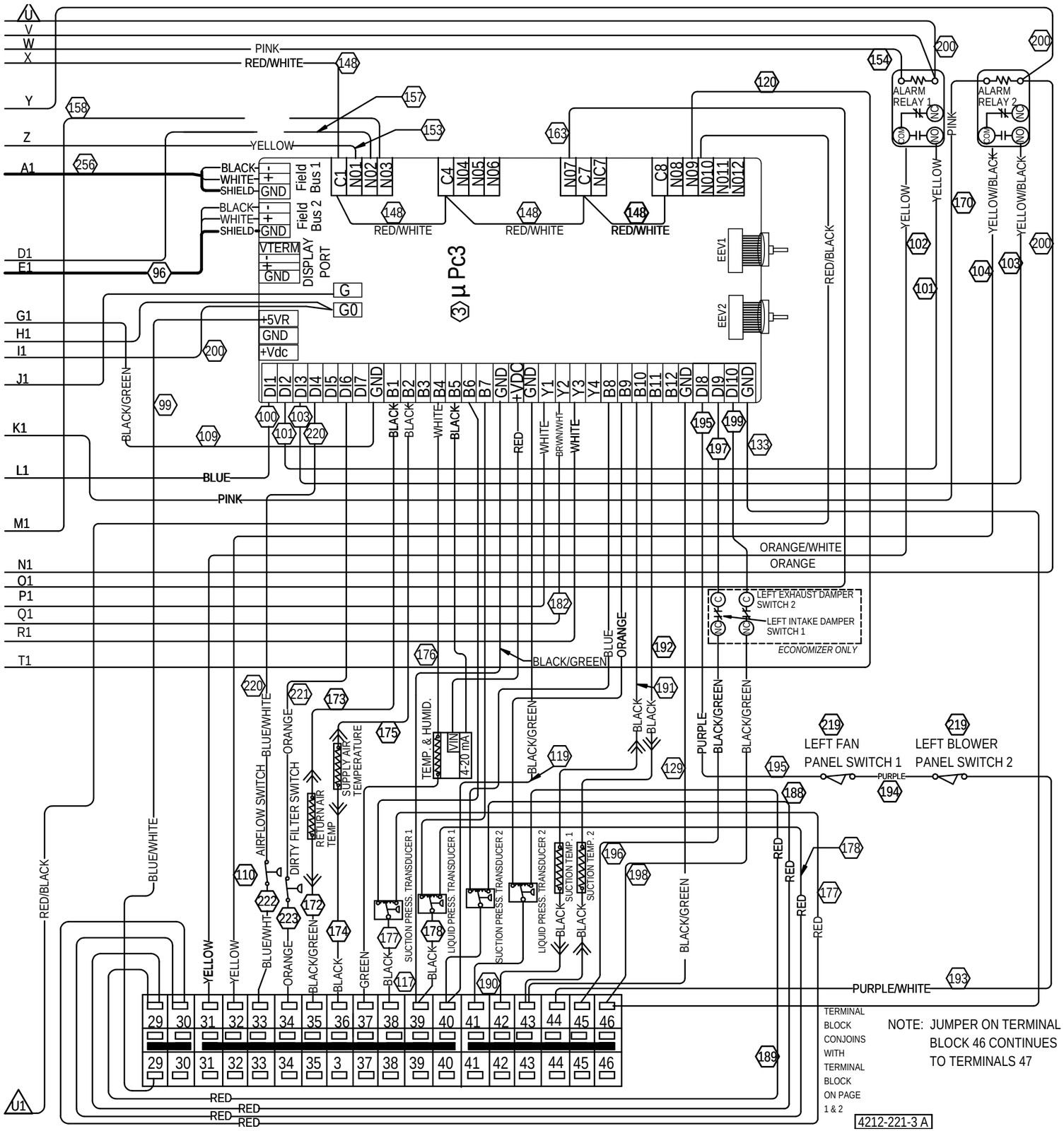
U
V
W
X
Y
Z
A1
D1
E1
G1
H1
I1
J1
K1
L1
M1
N1
O1
P1
Q1
R1
T1
U1
PINK
RED/WHITE
YELLOW
BLACK
WHITE
SHIELD
GND
Field Bus 1
Field Bus 2
VTERM
DISPLAY PORT
G
G0
+5VR
+Vdc
µ Pc3
EEV1
EEV2
ALARM RELAY 1
ALARM RELAY 2
COM
NO
YELLOW/BLACK
RED/BLACK
BLACK/GREEN
BLUE
ORANGE/WHITE
ORANGE
LEFT EXHAUST DAMPER SWITCH 2
LEFT INTAKE DAMPER SWITCH 1
ECONOMIZER ONLY
BLUE/WHITE
AIRFLOW SWITCH
DIRTY FILTER SWITCH
RETURN AIR TEMP
SUPPLY AIR TEMPERATURE
TEMP. & HUMID.
VIN
4-20 mA
SUCTION PRESS. TRANSDUCER 1
LIQUID PRESS. TRANSDUCER 1
SUCTION PRESS. TRANSDUCER 2
LIQUID PRESS. TRANSDUCER 2
SUCTION TEMP. 1
SUCTION TEMP. 2
GREEN
PURPLE
LEFT FAN PANEL SWITCH 1
LEFT BLOWER PANEL SWITCH 2
PURPLE/WHITE
TERMINAL BLOCK CONJOINS WITH TERMINAL BLOCK ON PAGE 1 & 2
NOTE: JUMPER ON TERMINAL BLOCK 46 CONTINUES TO TERMINALS 47
4212-221-3 A