230-3-60
PER NAMEPLATE

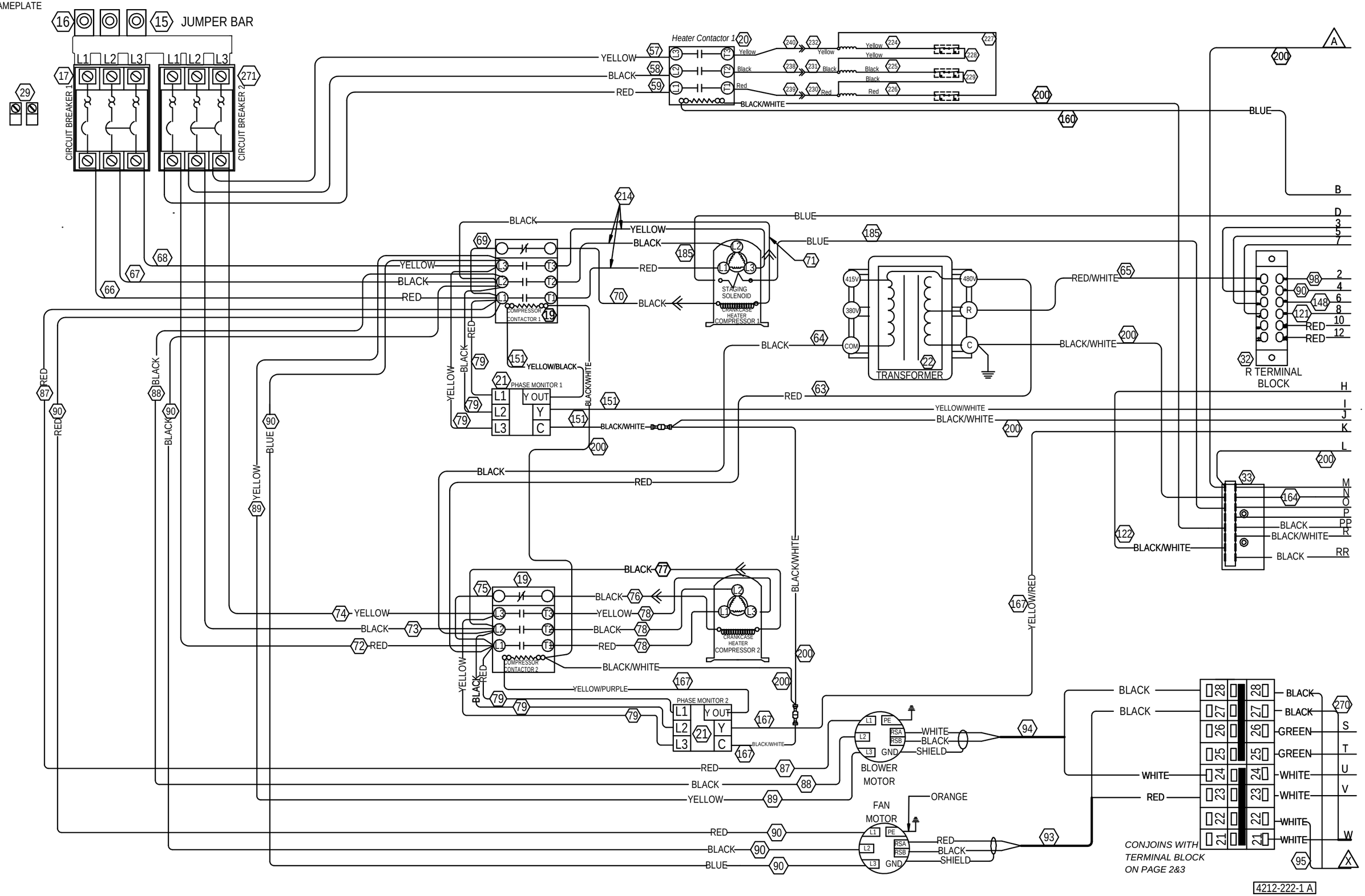

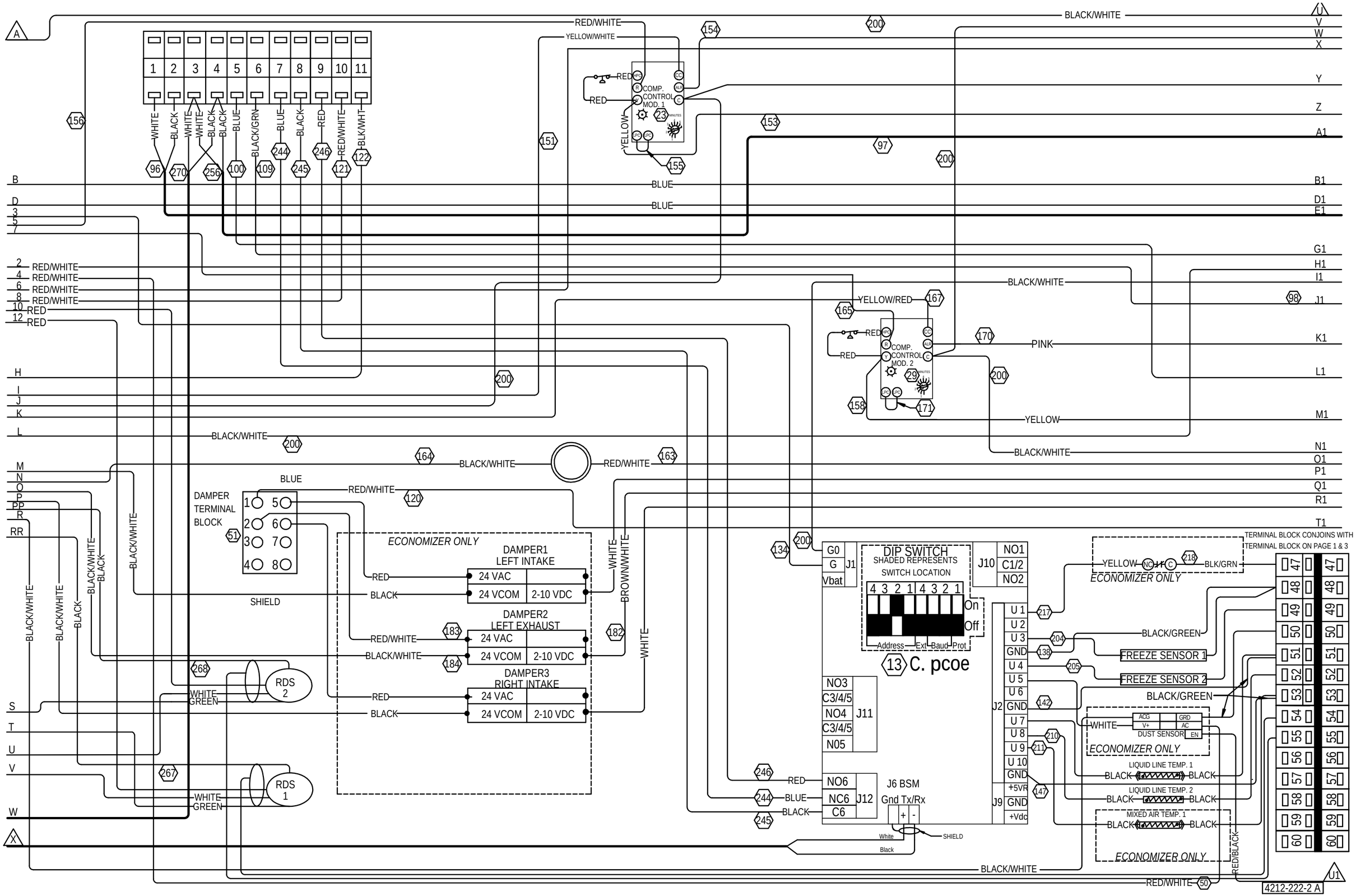
COMP. CONTROL MOD. 1
COMP. CONTROL MOD. 2
DAMPER TERMINAL BLOCK
ECONOMIZER ONLY
DAMPER1 LEFT INTAKE
DAMPER2 LEFT EXHAUST
DAMPER3 RIGHT INTAKE
24 VAC
24 VCOM
2-10 VDC
SHIELD
RDS 2
RDS 1
DIP SWITCH
SHADED REPRESENTS SWITCH LOCATION
C. pcoe
J6 BSM
Gnd Tx/Rx
FREEZE SENSOR 1
FREEZE SENSOR 2
DUST SENSOR
LIQUID LINE TEMP. 1
LIQUID LINE TEMP. 2
MIXED AIR TEMP. 1
TERMINAL BLOCK CONJOINS WITH TERMINAL BLOCK ON PAGE 1 & 3
4212-222-2 A

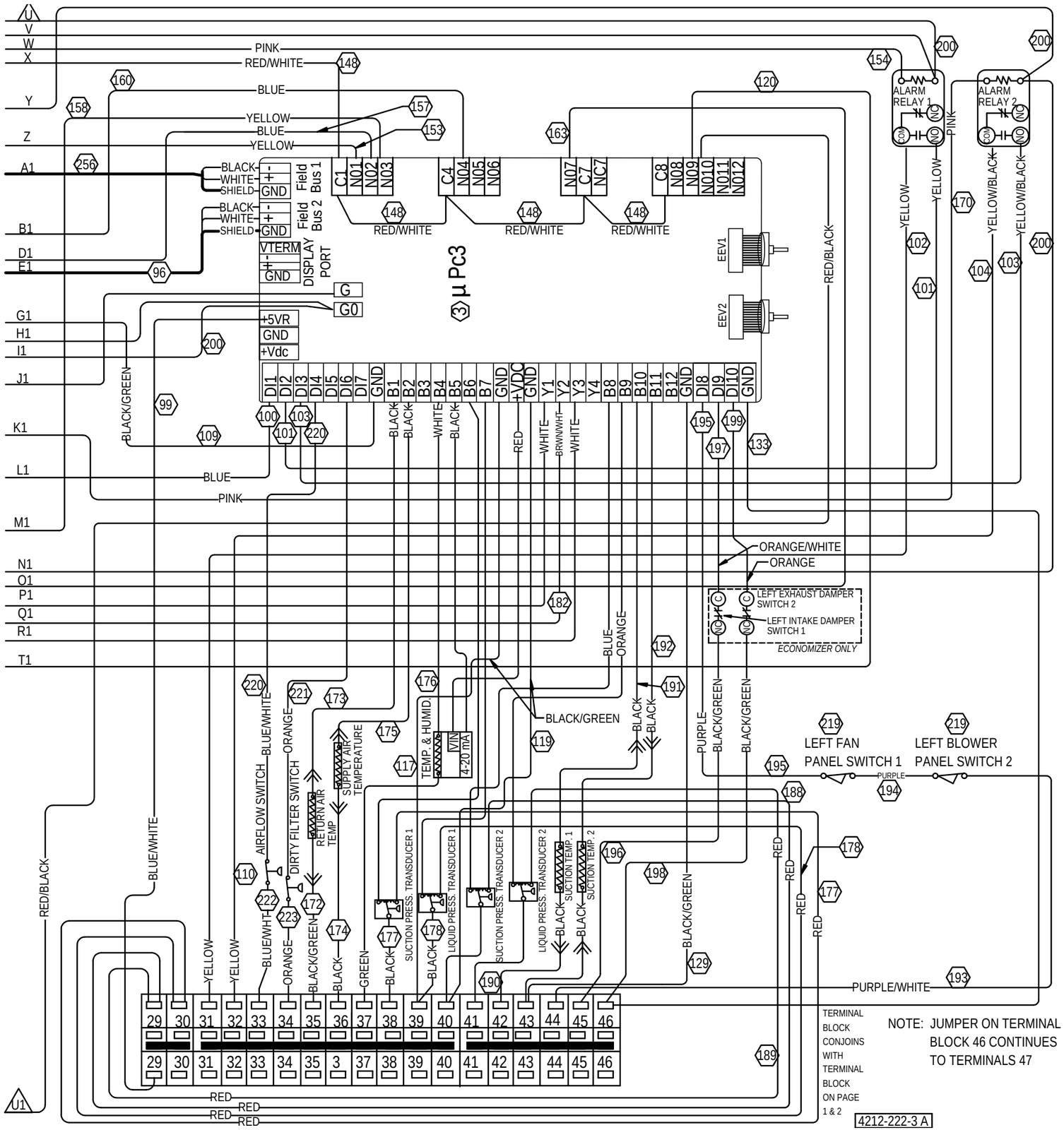

TERMINAL BLOCK CONJOINS WITH TERMINAL BLOCK ON PAGE 1 & 2

NOTE: JUMPER ON TERMINAL BLOCK 46 CONTINUES TO TERMINALS 47

4212-222-3 A