230-3-60
PER NAMEPLATE

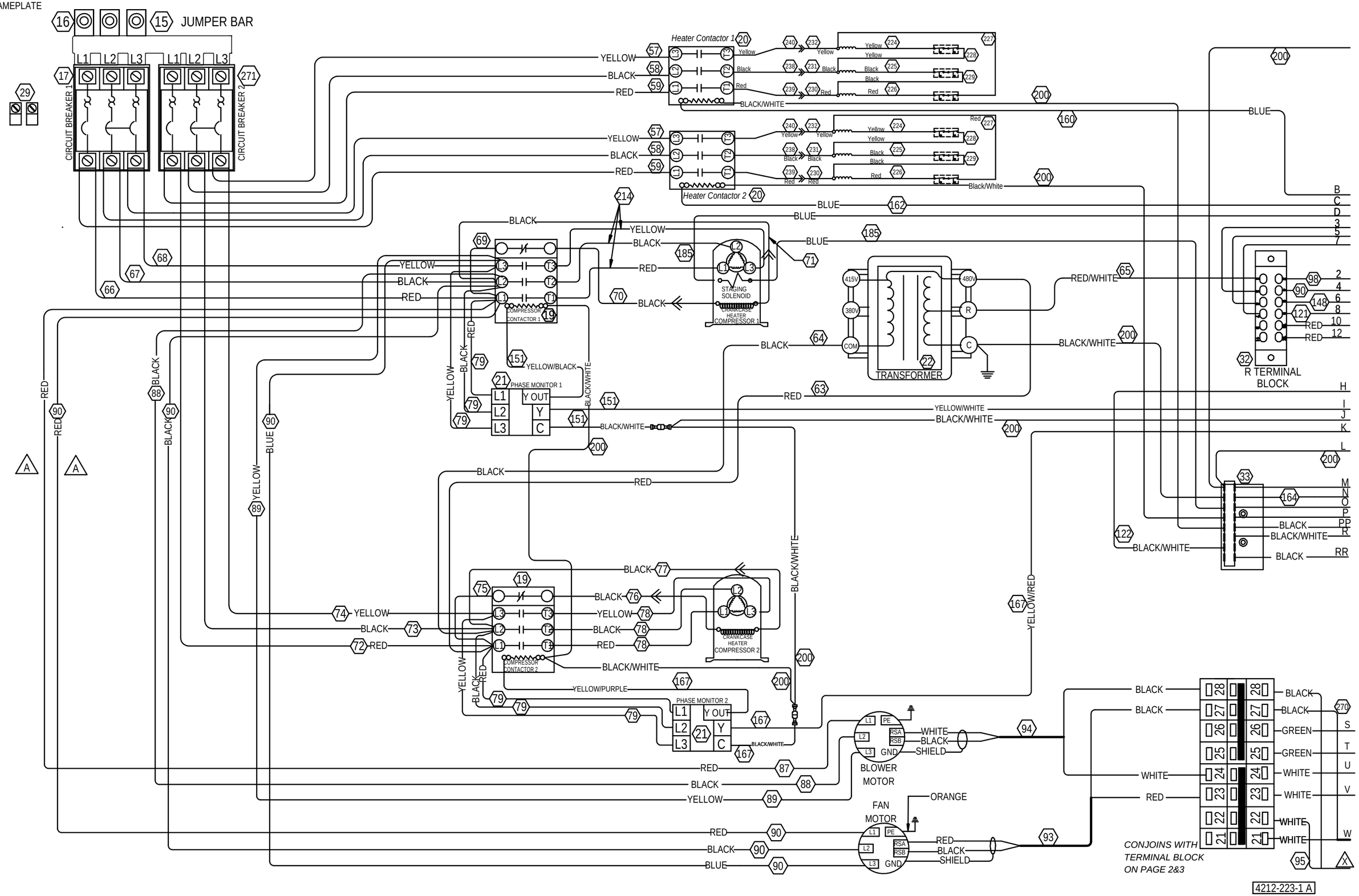

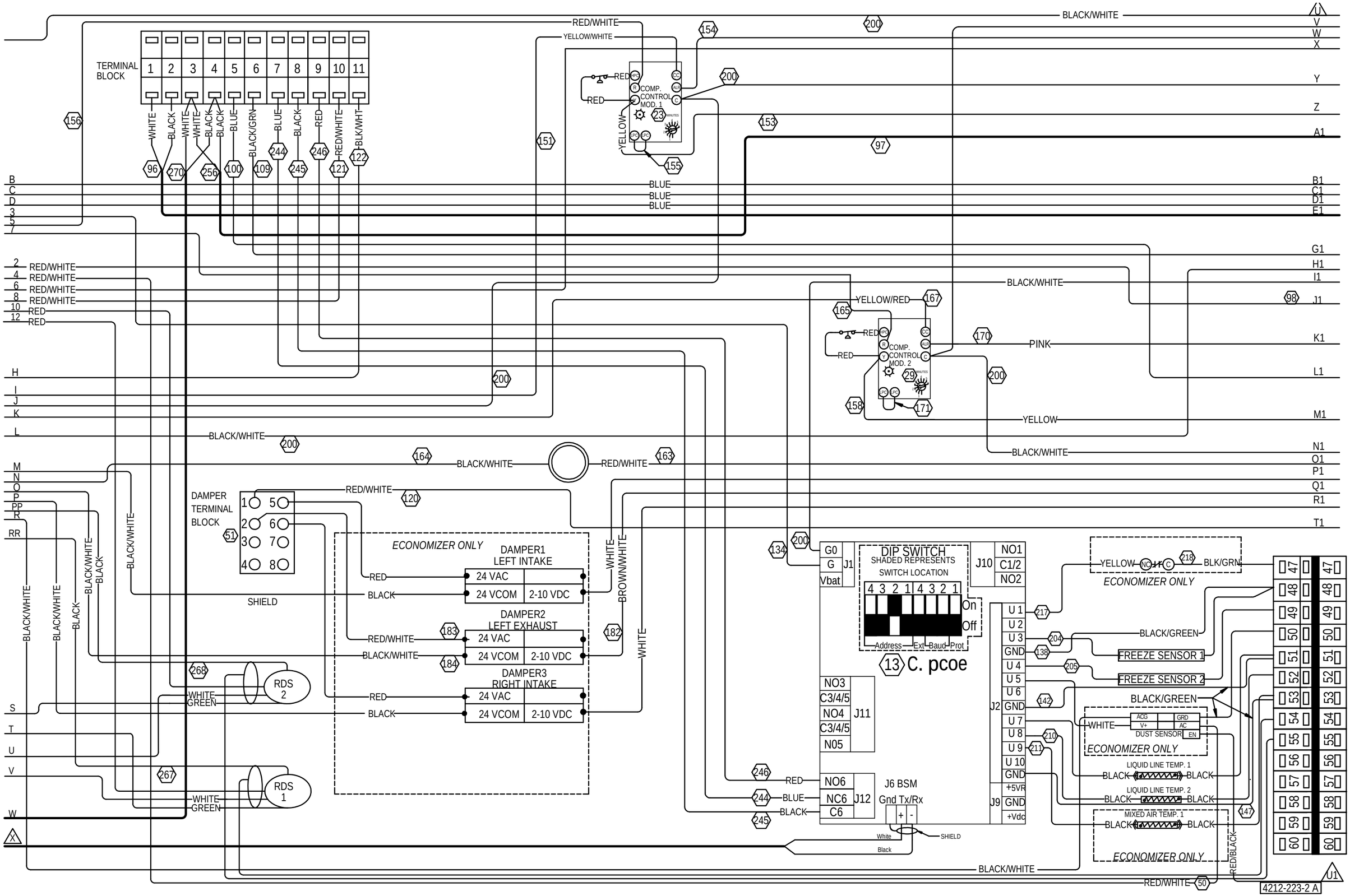
TERMINAL BLOCK
1 2 3 4 5 6 7 8 9 10 11
WHITE
BLACK
WHITE
WHITE
BLACK
BLACK
BLUE
BLACK/GRN
BLUE
BLACK
RED
RED/WHITE
BLK/WHT
RED/WHITE
YELLOW/WHITE
COMP. CONTROL MOD. 1
RED
YELLOW
BLUE
BLUE
BLUE
BLACK/WHITE
YELLOW/RED
COMP. CONTROL MOD. 2
PINK
YELLOW
DAMPER TERMINAL BLOCK
SHIELD
ECONOMIZER ONLY
DAMPER1 LEFT INTAKE
24 VAC
24 VCOM
2-10 VDC
DAMPER2 LEFT EXHAUST
DAMPER3 RIGHT INTAKE
WHITE
BROWN/WHITE
RDS 2
RDS 1
WHITE
GREEN
DIP SWITCH
SHADED REPRESENTS SWITCH LOCATION
On
Off
Address Ext Baud Prot
C. pcoe
J1
J10
J11
J12
J2
J9
NO1
C1/2
NO2
NO3
C3/4/5
NO4
NO5
NO6
NC6
C6
J6 BSM
Gnd Tx/Rx
White
Black
SHIELD
YELLOW
BLK/GRN
BLACK/GREEN
FREEZE SENSOR 1
FREEZE SENSOR 2
DUST SENSOR
LIQUID LINE TEMP. 1
LIQUID LINE TEMP. 2
MIXED AIR TEMP. 1
RED/BLACK
4212-223-2 A

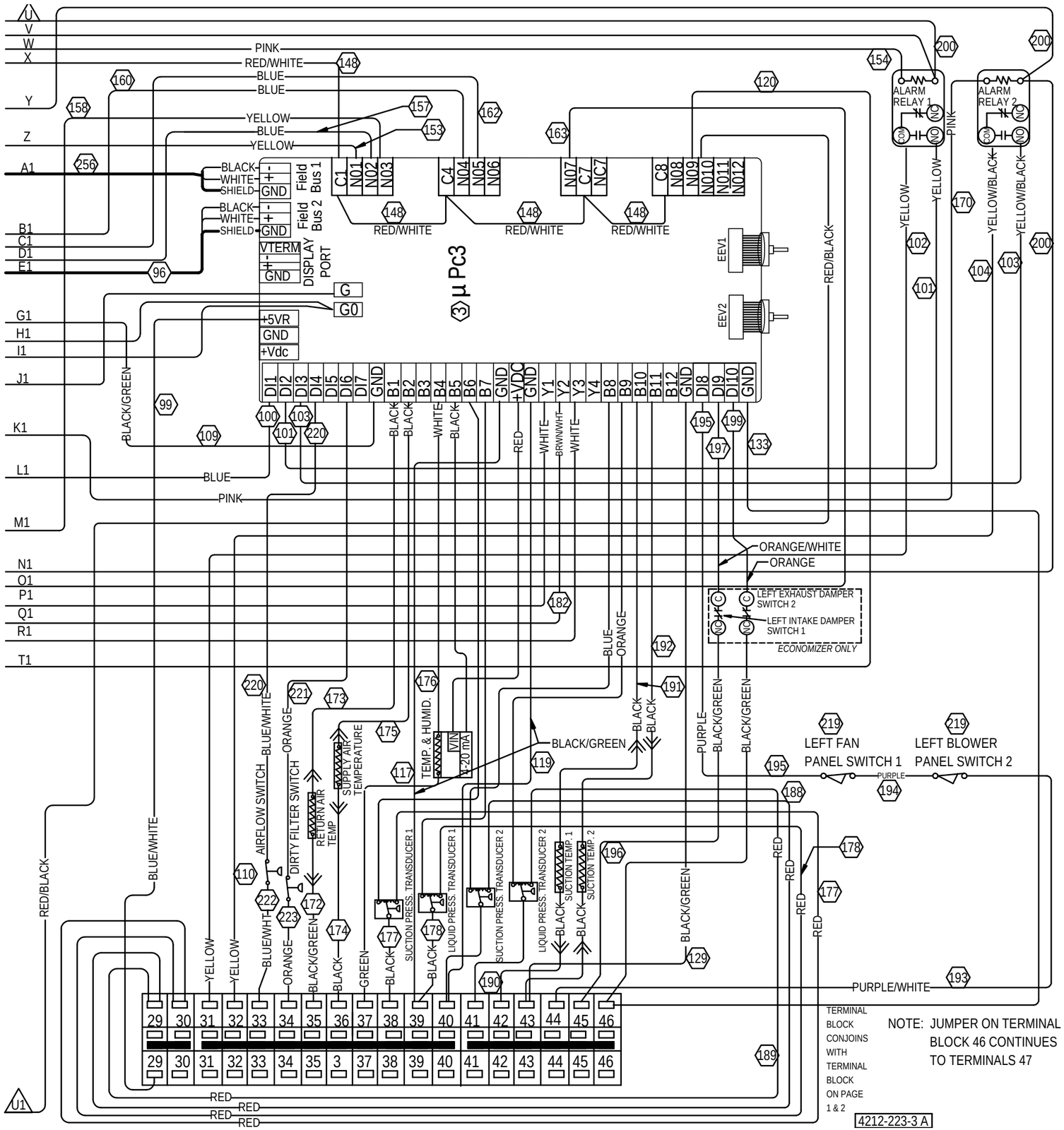
U
V
W
X
Y
Z
A1
B1
C1
D1
E1
G1
H1
I1
J1
K1
L1
M1
N1
O1
P1
Q1
R1
T1
PINK
RED/WHITE
BLUE
YELLOW
BLACK
WHITE
SHIELD
GND
Field Bus 1
Field Bus 2
VTERM
DISPLAY PORT
G
G0
+5VR
+Vdc
C1 NO1 NO2 NO3
C4 NO4 NO5 NO6
NO7 C7 NC7
C8 NO8 NO9 NO10 NO11 NO12
μPc3
EEV1
EEV2
DI1 DI2 DI3 DI4 DI5 DI6 DI7 GND B1 B2 B3 B4 B5 B6 B7 GND +VDC GND Y1 Y2 Y3 Y4 B8 B9 B10 B11 B12 GND DI8 DI9 DI10 GND
ALARM RELAY 1
ALARM RELAY 2
COM
NO
BLACK/GREEN
RED/BLACK
YELLOW/BLACK
ORANGE/WHITE
ORANGE
LEFT EXHAUST DAMPER SWITCH 2
LEFT INTAKE DAMPER SWITCH 1
ECONOMIZER ONLY
BLUE/WHITE
AIRFLOW SWITCH
DIRTY FILTER SWITCH
RETURN AIR TEMP
SUPPLY AIR TEMPERATURE
TEMP. & HUMID.
VIN
4-20 mA
SUCTION PRESS. TRANSDUCER 1
LIQUID PRESS. TRANSDUCER 1
SUCTION PRESS. TRANSDUCER 2
LIQUID PRESS. TRANSDUCER 2
SUCTION TEMP. 1
SUCTION TEMP. 2
PURPLE
PURPLE/WHITE
LEFT FAN PANEL SWITCH 1
LEFT BLOWER PANEL SWITCH 2
29 30 31 32 33 34 35 36 37 38 39 40 41 42 43 44 45 46
29 30 31 32 33 34 35 3 37 38 39 40 41 42 43 44 45 46
TERMINAL BLOCK CONJOINS WITH TERMINAL BLOCK ON PAGE 1 & 2
NOTE: JUMPER ON TERMINAL BLOCK 46 CONTINUES TO TERMINALS 47
U1
4212-223-3 A