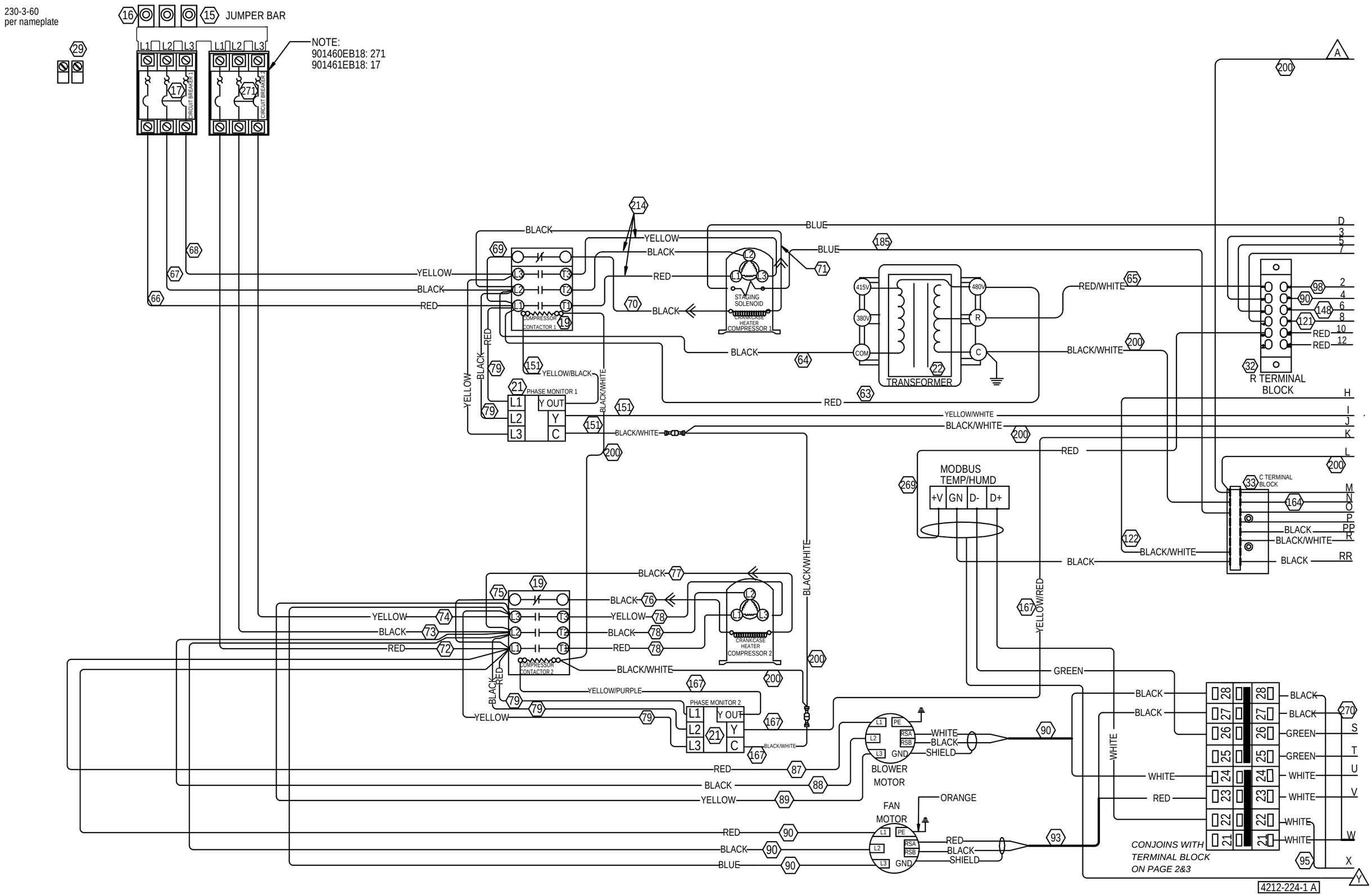
230-3-60
per nameplate
JUMPER BAR
NOTE:
901460EB18: 271
901461EB18: 17
CIRCUIT BREAKER 1
CIRCUIT BREAKER 2
COMPRESSOR CONTACTOR 1
STAGING SOLENOID
CRANKCASE HEATER COMPRESSOR 1
TRANSFORMER
R TERMINAL BLOCK
PHASE MONITOR 1
MODBUS TEMP/HUMD
+V GN D- D+
C TERMINAL BLOCK
COMPRESSOR CONTACTOR 2
CRANKCASE HEATER COMPRESSOR 2
PHASE MONITOR 2
BLOWER MOTOR
FAN MOTOR
CONJOINS WITH TERMINAL BLOCK ON PAGE 2&3
4212-224-1 A

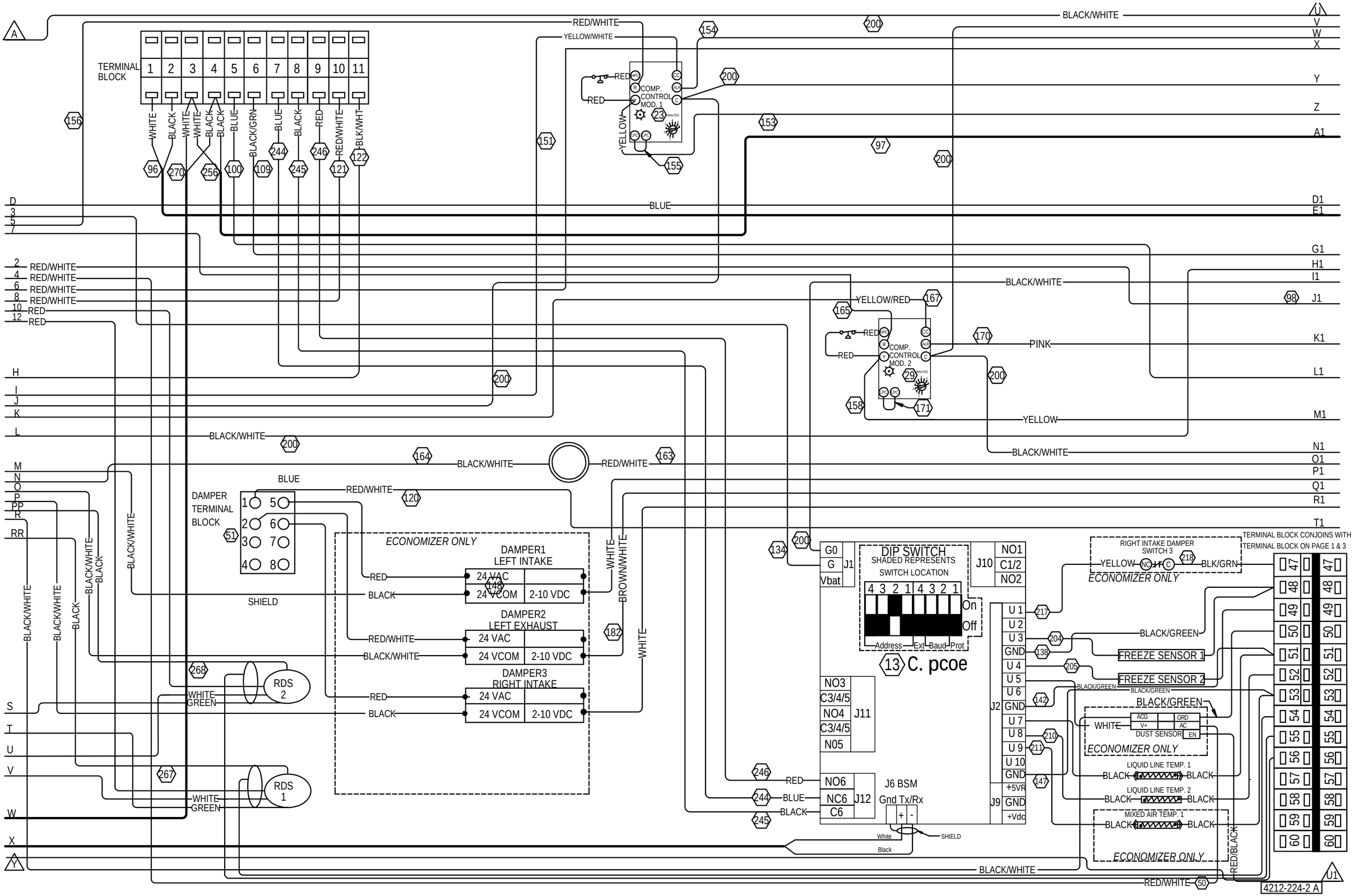
TERMINAL BLOCK
1 2 3 4 5 6 7 8 9 10 11
WHITE
BLACK
WHITE
WHITE
BLACK
BLACK
BLUE
BLACK/GRN
BLUE
BLACK
RED
RED/WHITE
BLK/WHT
COMP. CONTROL MOD. 1
COMP. CONTROL MOD. 2
YELLOW/RED
YELLOW/WHITE
RED/WHITE
BLACK/WHITE
BLUE
PINK
YELLOW
DAMPER TERMINAL BLOCK
SHIELD
ECONOMIZER ONLY
DAMPER1 LEFT INTAKE
DAMPER2 LEFT EXHAUST
DAMPER3 RIGHT INTAKE
24 VAC
24 VCOM
2-10 VDC
RDS 2
RDS 1
WHITE
GREEN
BROWN/WHITE
DIP SWITCH
SHADED REPRESENTS SWITCH LOCATION
Address Ext Baud Prot
On
Off
C. pcoe
J1
J10
J11
J12
J2
J9
J6 BSM
Gnd Tx/Rx
White
Black
RIGHT INTAKE DAMPER SWITCH 3
BLK/GRN
FREEZE SENSOR 1
FREEZE SENSOR 2
DUST SENSOR
LIQUID LINE TEMP. 1
LIQUID LINE TEMP. 2
MIXED AIR TEMP. 1
TERMINAL BLOCK CONJOINS WITH TERMINAL BLOCK ON PAGE 1 & 3
4212-224-2 A

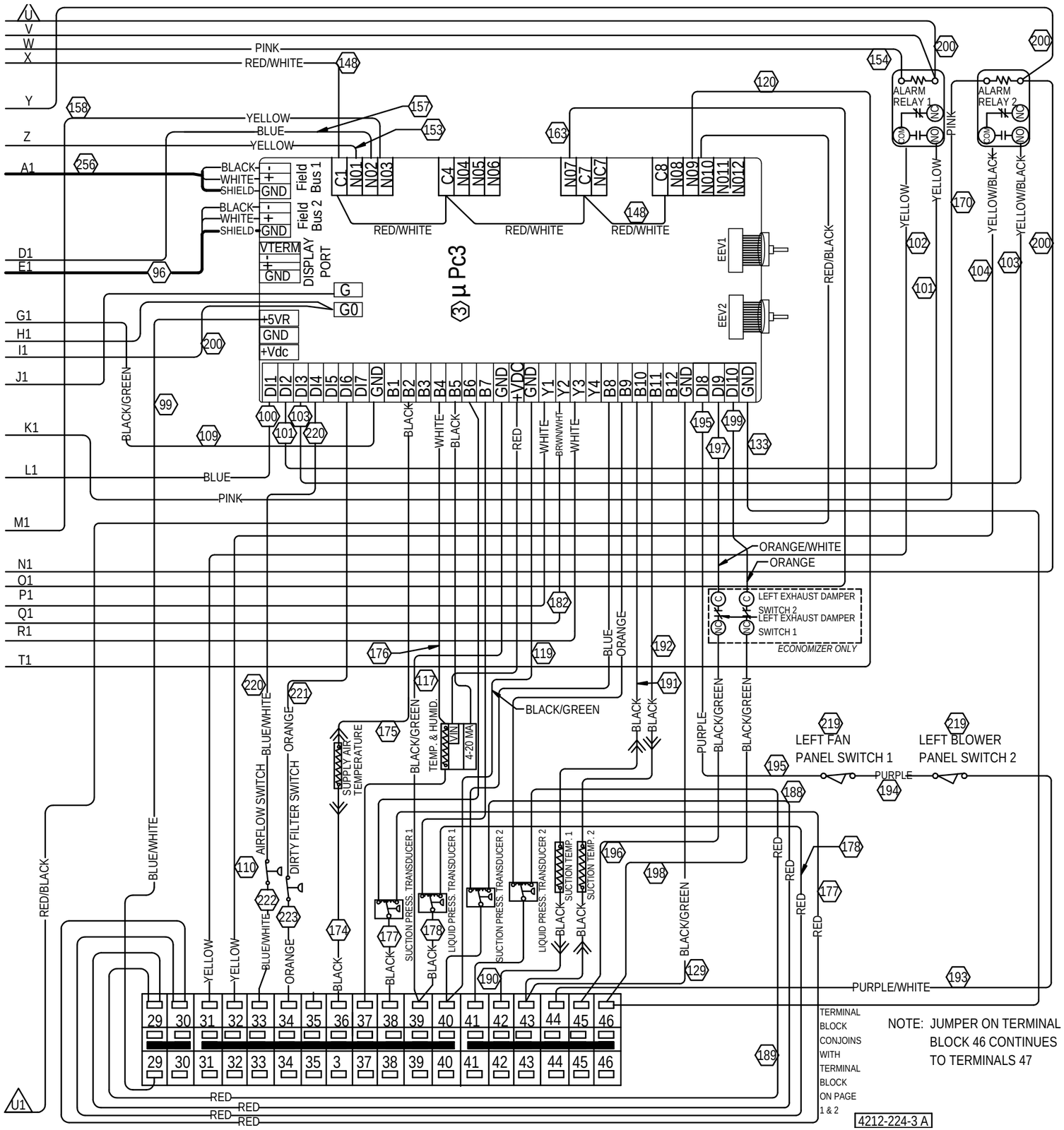
U
V
W
X
Y
Z
A1
D1
E1
G1
H1
I1
J1
K1
L1
M1
N1
O1
P1
Q1
R1
T1
PINK
RED/WHITE
YELLOW
BLUE
BLACK
WHITE
SHIELD
GND
Field Bus 1
Field Bus 2
VTERM
DISPLAY PORT
G
G0
+5VR
+Vdc
C1 NO1 NO2 NO3
C4 NO4 NO5 NO6
NO7 C7 NC7
C8 NO8 NO9 NO10 NO11 NO12
EEV1
EEV2
µPc3
DI1 DI2 DI3 DI4 DI5 DI6 DI7 GND B1 B2 B3 B4 B5 B6 B7 GND +VDC GND Y1 Y2 Y3 Y4 B8 B9 B10 B11 B12 GND DI8 DI9 DI10 GND
ALARM RELAY 1
ALARM RELAY 2
COM
NO
NC
YELLOW/BLACK
RED/BLACK
BLACK/GREEN
BRWN/WHT
ORANGE/WHITE
ORANGE
LEFT EXHAUST DAMPER SWITCH 2
LEFT EXHAUST DAMPER SWITCH 1
ECONOMIZER ONLY
BLUE/WHITE
AIRFLOW SWITCH
DIRTY FILTER SWITCH
SUPPLY AIR TEMPERATURE
TEMP. & HUMID.
VIN
4-20 MA
SUCTION PRESS. TRANSDUCER 1
LIQUID PRESS. TRANSDUCER 1
SUCTION PRESS. TRANSDUCER 2
LIQUID PRESS. TRANSDUCER 2
SUCTION TEMP. 1
SUCTION TEMP. 2
PURPLE
LEFT FAN PANEL SWITCH 1
LEFT BLOWER PANEL SWITCH 2
PURPLE/WHITE
29 30 31 32 33 34 35 36 37 38 39 40 41 42 43 44 45 46
29 30 31 32 33 34 35 3 37 38 39 40 41 42 43 44 45 46
TERMINAL BLOCK CONJOINS WITH TERMINAL BLOCK ON PAGE 1 & 2
NOTE: JUMPER ON TERMINAL BLOCK 46 CONTINUES TO TERMINALS 47
U1
4212-224-3 A