230-3-60
PER NAMEPLATE

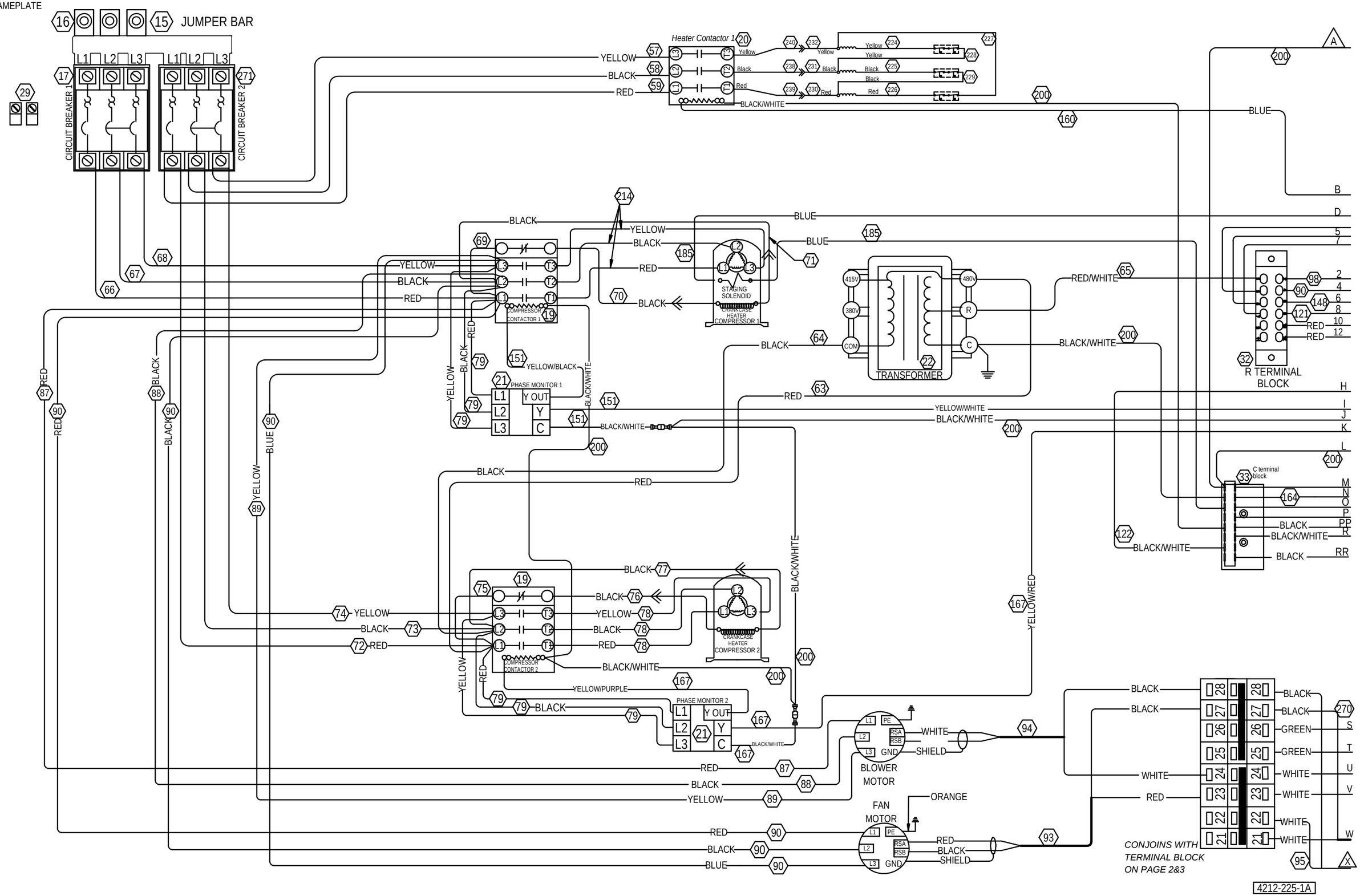

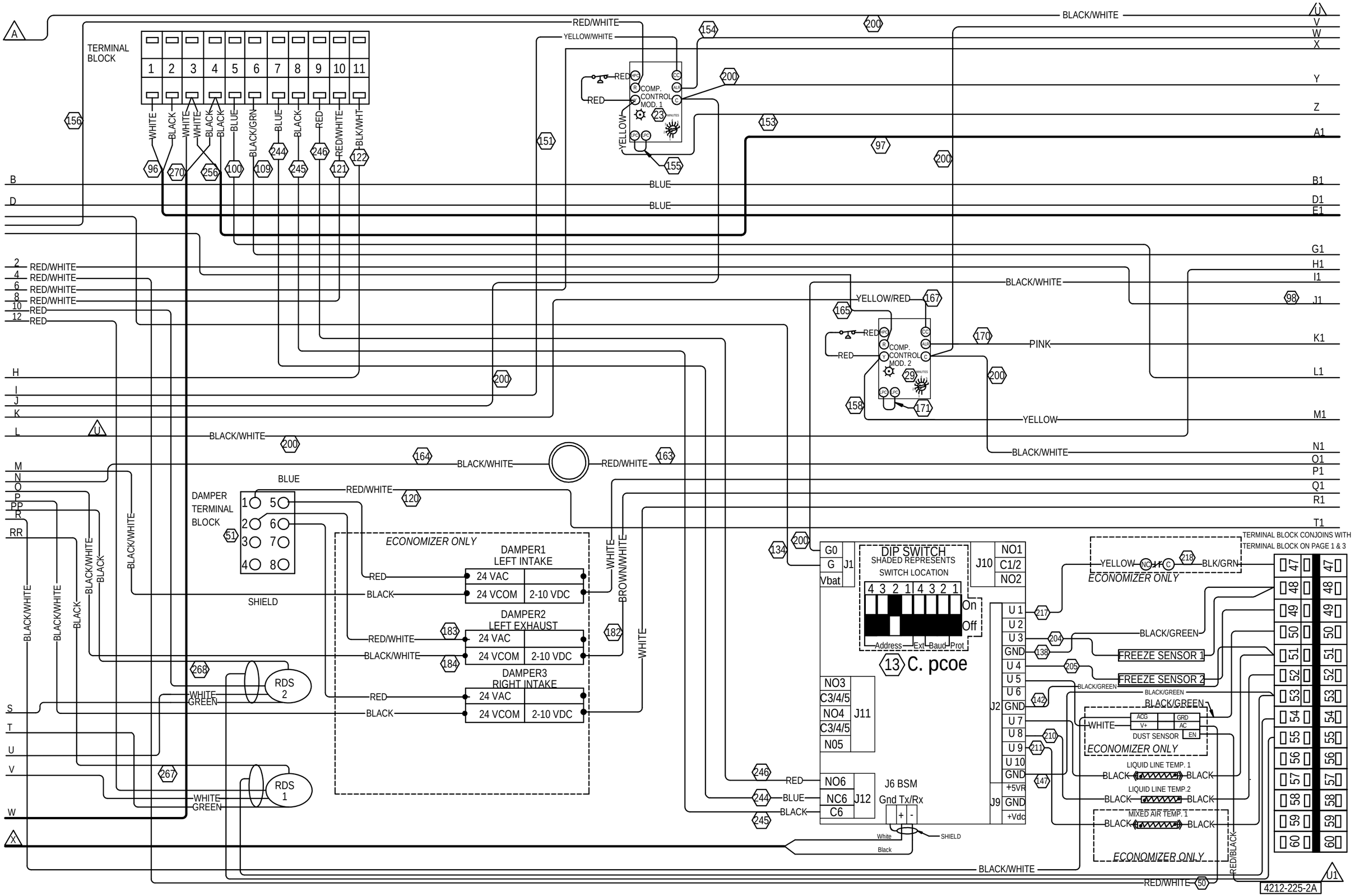
TERMINAL BLOCK
1 2 3 4 5 6 7 8 9 10 11
WHITE
BLACK
WHITE
WHITE
BLACK
BLACK
BLUE
BLACK/GRN
BLUE
BLACK
RED
RED/WHITE
BLK/WHT
RED/WHITE
YELLOW/WHITE
COMP. CONTROL MOD. 1
YELLOW
BLUE
BLUE
BLACK/WHITE
YELLOW/RED
COMP. CONTROL MOD. 2
PINK
YELLOW
BLACK/WHITE
DAMPER TERMINAL BLOCK
BLUE
RED/WHITE
SHIELD
ECONOMIZER ONLY
DAMPER1 LEFT INTAKE
24 VAC
24 VCOM
2-10 VDC
DAMPER2 LEFT EXHAUST
DAMPER3 RIGHT INTAKE
RDS 2
RDS 1
WHITE
GREEN
DIP SWITCH
SHADED REPRESENTS SWITCH LOCATION
Address Ext Baud Prot
On
Off
13 C. pcoe
J1 G0 G Vbat
J10 NO1 C1/2 NO2
J11 NO3 C3/4/5 NO4 C3/4/5 N05
J12 NO6 NC6 C6
J2 U 1 U 2 U 3 GND U 4 U 5 U 6 GND U 7 U 8 U 9 U 10 GND
J9 +5VR GND +Vdc
J6 BSM
Gnd Tx/Rx
White
Black
SHIELD
YELLOW
BLK/GRN
ECONOMIZER ONLY
BLACK/GREEN
FREEZE SENSOR 1
FREEZE SENSOR 2
WHITE
DUST SENSOR
LIQUID LINE TEMP. 1
LIQUID LINE TEMP.2
MIXED AIR TEMP. 1
RED/BLACK
TERMINAL BLOCK CONJOINS WITH TERMINAL BLOCK ON PAGE 1 & 3
4212-225-2A

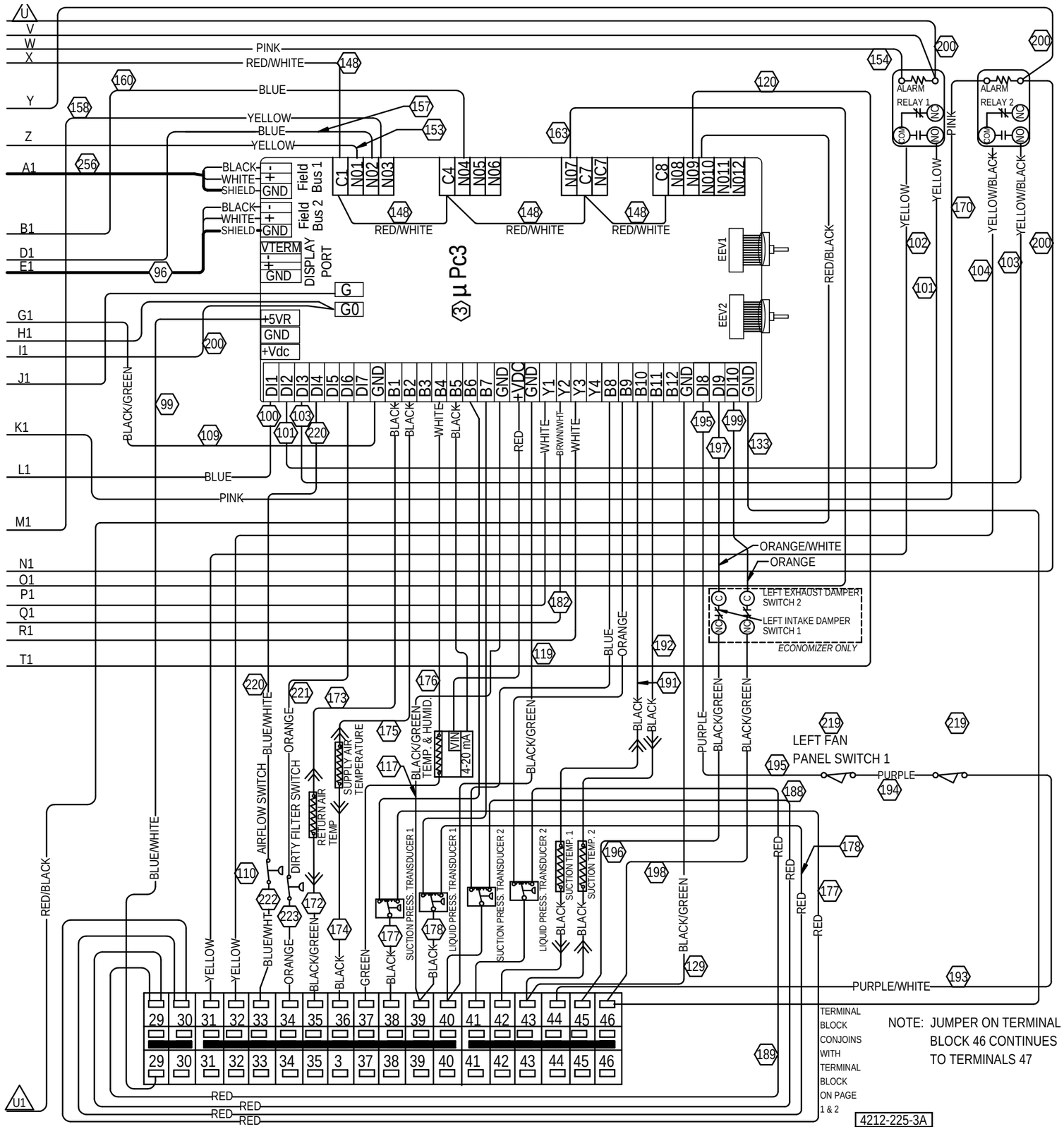
U
V
W
X
Y
Z
A1
B1
D1
E1
G1
H1
I1
J1
K1
L1
M1
N1
O1
P1
Q1
R1
T1
PINK
RED/WHITE
BLUE
YELLOW
BLACK
WHITE
SHIELD
GND
Field Bus 1
Field Bus 2
VTERM
DISPLAY PORT
G
G0
+5VR
+Vdc
µPc3
C1 NO1 NO2 NO3
C4 NO4 NO5 NO6
NO7 C7 NC7
C8 NO8 NO9 NO10 NO11 NO12
EEV1
EEV2
DI1 DI2 DI3 DI4 DI5 DI6 DI7 GND B1 B2 B3 B4 B5 B6 B7 GND +VDC GND Y1 Y2 Y3 Y4 B8 B9 B10 B11 B12 GND DI8 DI9 DI10 GND
ALARM
RELAY 1
RELAY 2
COM
NO
YELLOW/BLACK
RED/BLACK
BLACK/GREEN
BLUE/WHITE
ORANGE/WHITE
ORANGE
LEFT EXHAUST DAMPER SWITCH 2
LEFT INTAKE DAMPER SWITCH 1
ECONOMIZER ONLY
LEFT FAN PANEL SWITCH 1
PURPLE
PURPLE/WHITE
AIRFLOW SWITCH
DIRTY FILTER SWITCH
RETURN AIR TEMP
SUPPLY AIR TEMPERATURE
TEMP. & HUMID.
VIN
4-20 mA
SUCTION PRESS. TRANSDUCER 1
LIQUID PRESS. TRANSDUCER 1
SUCTION PRESS. TRANSDUCER 2
LIQUID PRESS. TRANSDUCER 2
SUCTION TEMP. 1
SUCTION TEMP. 2
BLUE/WHT
GREEN
29 30 31 32 33 34 35 36 37 38 39 40 41 42 43 44 45 46
29 30 31 32 33 34 35 3 37 38 39 40 41 42 43 44 45 46
TERMINAL BLOCK CONJOINS WITH TERMINAL BLOCK ON PAGE 1 & 2
NOTE: JUMPER ON TERMINAL BLOCK 46 CONTINUES TO TERMINALS 47
U1
4212-225-3A