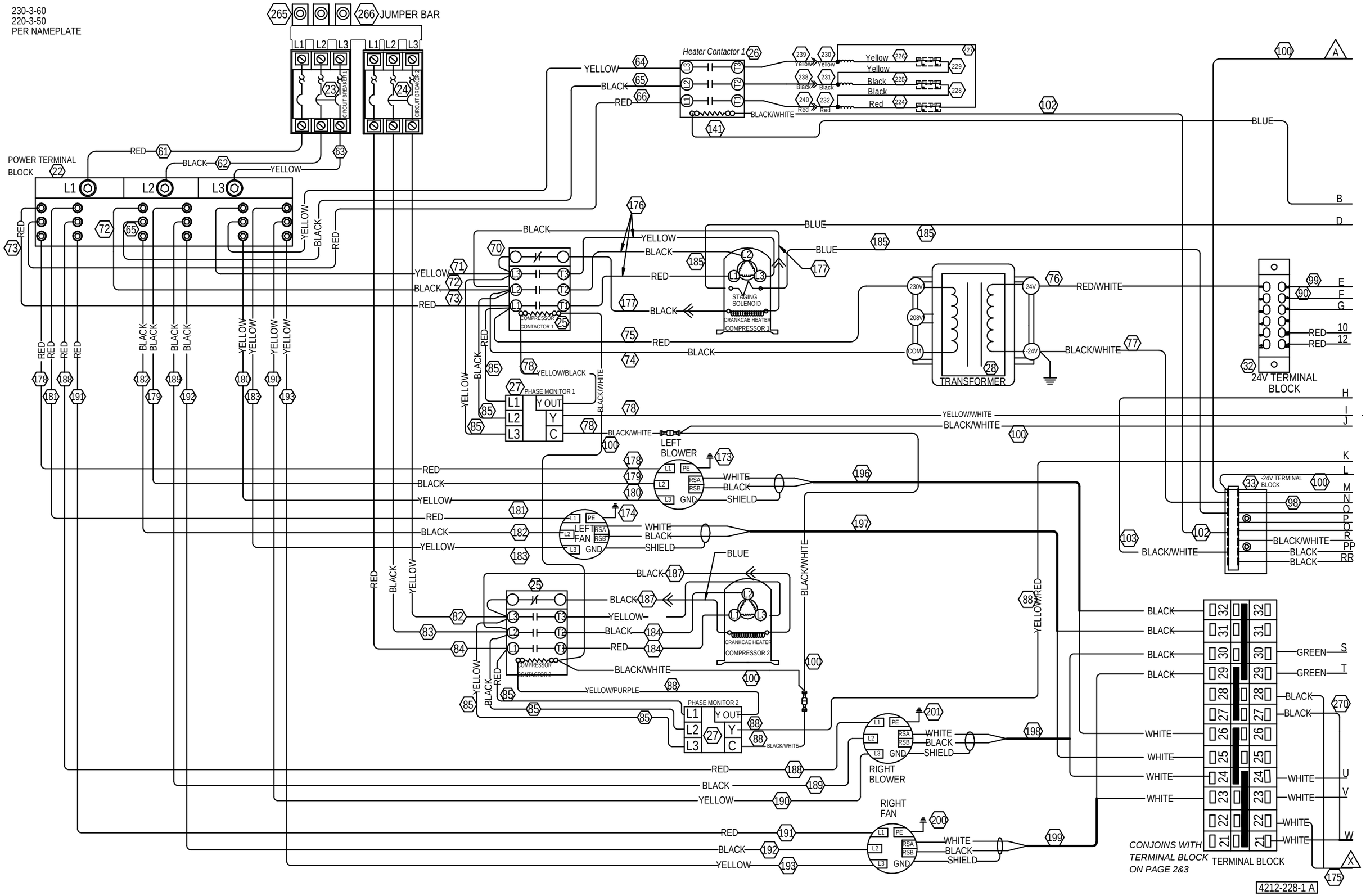
230-3-60
220-3-50
PER NAMEPLATE
JUMPER BAR
CIRCUIT BREAKER 1
CIRCUIT BREAKER 2
POWER TERMINAL BLOCK
Heater Contactor 1
STAGING SOLENOID
CRANKCAE HEATER
COMPRESSOR 1
COMPRESSOR CONTACTOR 1
PHASE MONITOR 1
TRANSFORMER
24V TERMINAL BLOCK
-24V TERMINAL BLOCK
LEFT BLOWER
LEFT FAN
CRANKCAE HEATER
COMPRESSOR 2
COMPRESSOR CONTACTOR 2
PHASE MONITOR 2
RIGHT BLOWER
RIGHT FAN
TERMINAL BLOCK
CONJOINS WITH TERMINAL BLOCK ON PAGE 2&3
4212-228-1 A

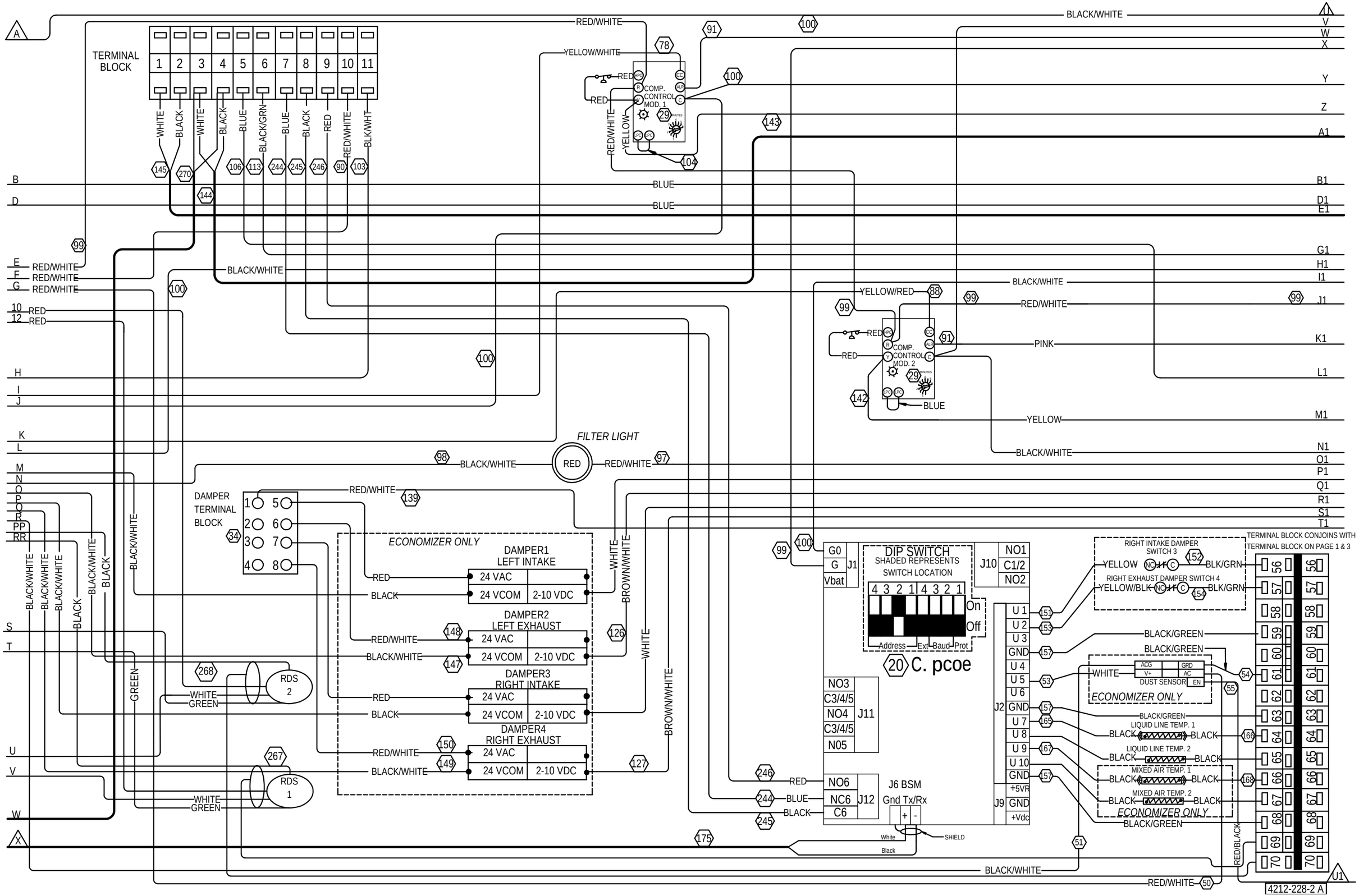

TERMINAL BLOCK
1 2 3 4 5 6 7 8 9 10 11
WHITE BLACK WHITE BLACK BLUE BLACK/GRN BLUE BLACK RED RED/WHITE BLK/WHT
COMP. CONTROL MOD. 1
COMP. CONTROL MOD. 2
FILTER LIGHT
RED
DAMPER TERMINAL BLOCK
ECONOMIZER ONLY
DAMPER1 LEFT INTAKE
DAMPER2 LEFT EXHAUST
DAMPER3 RIGHT INTAKE
DAMPER4 RIGHT EXHAUST
24 VAC
24 VCOM
2-10 VDC
RDS 1
RDS 2
DIP SWITCH
SHADED REPRESENTS SWITCH LOCATION
Address Ext Baud Prot
On
Off
20 C. pcoe
J6 BSM
Gnd Tx/Rx
SHIELD
RIGHT INTAKE DAMPER SWITCH 3
RIGHT EXHAUST DAMPER SWITCH 4
DUST SENSOR
LIQUID LINE TEMP. 1
LIQUID LINE TEMP. 2
MIXED AIR TEMP. 1
MIXED AIR TEMP. 2
TERMINAL BLOCK CONJOINS WITH TERMINAL BLOCK ON PAGE 1 & 3
4212-228-2 A

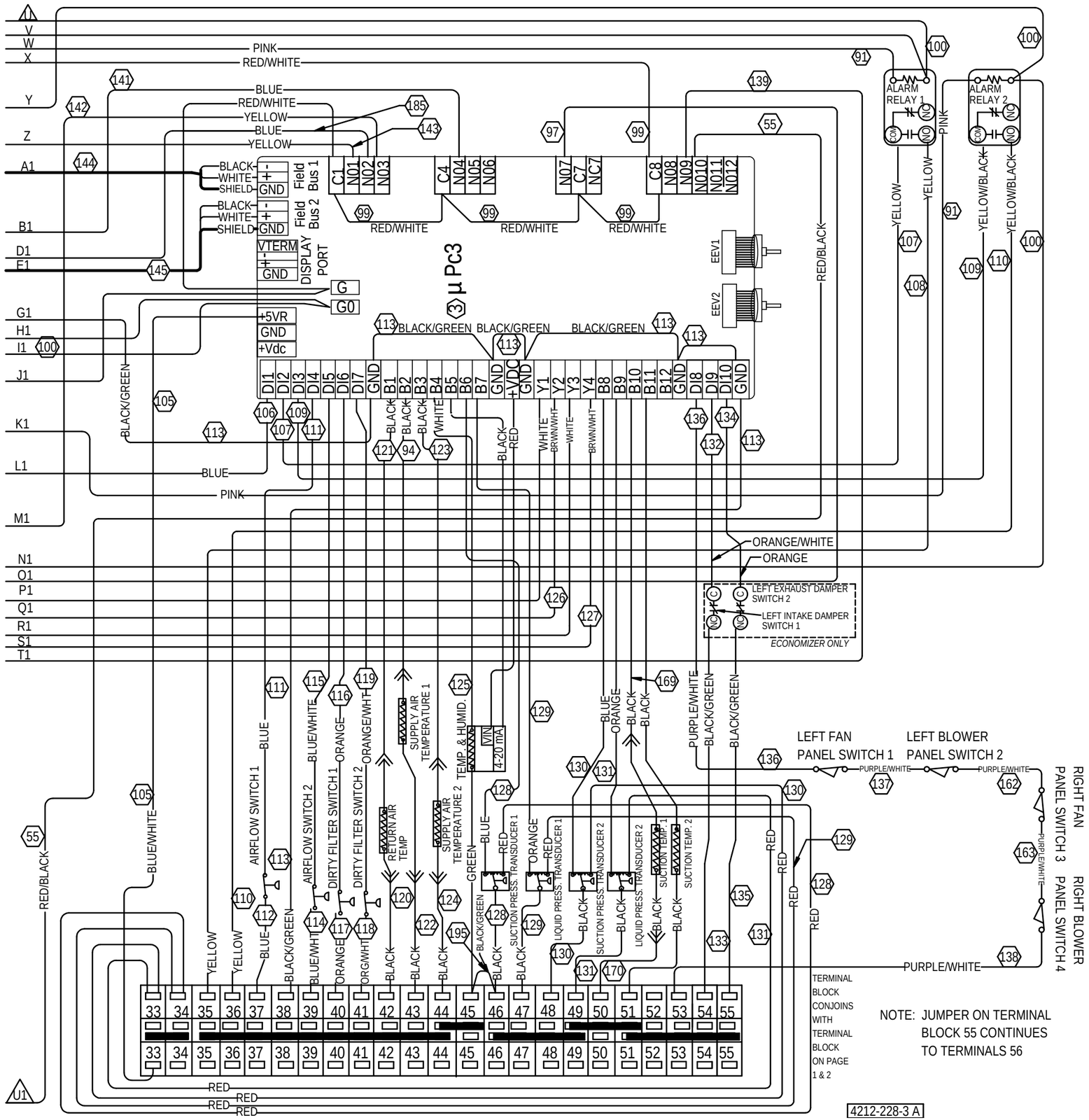
ALARM RELAY 1
ALARM RELAY 2
Field Bus 1
Field Bus 2
DISPLAY PORT
µ Pc3
EEV1
EEV2
LEFT EXHAUST DAMPER SWITCH 2
LEFT INTAKE DAMPER SWITCH 1
ECONOMIZER ONLY
AIRFLOW SWITCH 1
AIRFLOW SWITCH 2
DIRTY FILTER SWITCH 1
DIRTY FILTER SWITCH 2
RETURN AIR TEMP
SUPPLY AIR TEMPERATURE 1
SUPPLY AIR TEMPERATURE 2
TEMP. & HUMID.
SUCTION PRESS. TRANSDUCER 1
LIQUID PRESS. TRANSDUCER 1
SUCTION PRESS. TRANSDUCER 2
LIQUID PRESS. TRANSDUCER 2
SUCTION TEMP. 1
SUCTION TEMP. 2
LEFT FAN PANEL SWITCH 1
LEFT BLOWER PANEL SWITCH 2
RIGHT FAN PANEL SWITCH 3
RIGHT BLOWER PANEL SWITCH 4
TERMINAL BLOCK CONJOINS WITH TERMINAL BLOCK ON PAGE 1 & 2
NOTE: JUMPER ON TERMINAL BLOCK 55 CONTINUES TO TERMINALS 56
4212-228-3 A