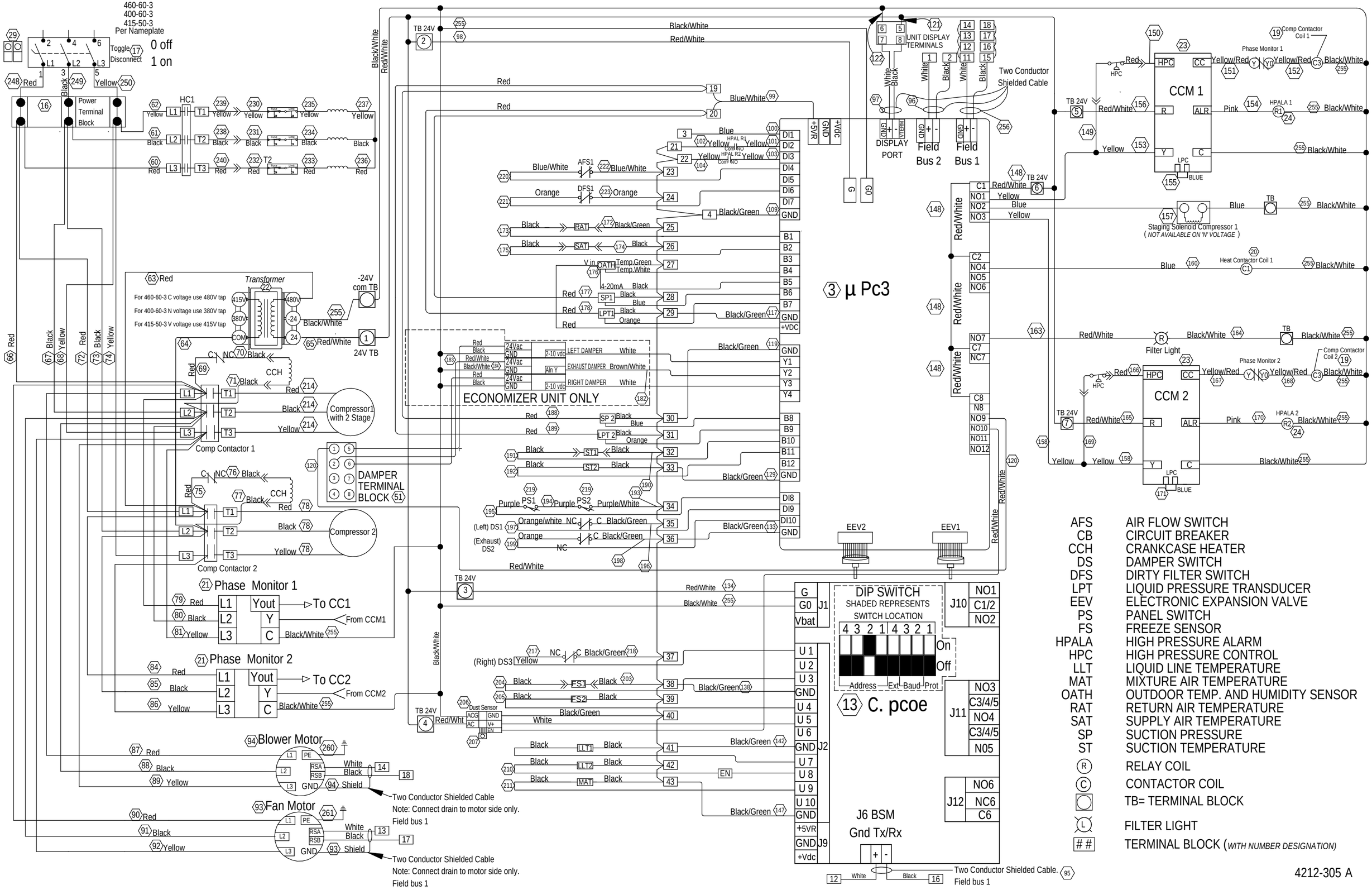
460-60-3
400-60-3
415-50-3
Per Nameplate
0 off
1 on
Toggle Disconnect
Power Terminal Block
HC1
Transformer
For 460-60-3 C voltage use 480V tap
For 400-60-3 N voltage use 380V tap
For 415-50-3 V voltage use 415V tap
-24V com TB
24V TB
CCH
Comp Contactor 1
Compressor1 with 2 Stage
Comp Contactor 2
Compressor 2
DAMPER TERMINAL BLOCK
Phase Monitor 1
Phase Monitor 2
To CC1
From CCM1
To CC2
From CCM2
Blower Motor
Fan Motor
Two Conductor Shielded Cable
Note: Connect drain to motor side only.
Field bus 1
TB 24V
UNIT DISPLAY TERMINALS
Two Conductor Shielded Cable
DISPLAY PORT
Field Bus 2
Field Bus 1
ECONOMIZER UNIT ONLY
LEFT DAMPER
EXHAUST DAMPER
RIGHT DAMPER
3 µ Pc3
EEV2
EEV1
CCM 1
CCM 2
Comp Contactor Coil 1
Comp Contactor Coil 2
Phase Monitor 1
Phase Monitor 2
HPALA 1
HPALA 2
Staging Solenoid Compressor 1
(NOT AVAILABLE ON 'N' VOLTAGE)
Heat Contactor Coil 1
Filter Light
DIP SWITCH
SHADED REPRESENTS SWITCH LOCATION
Address Ext Baud Prot
On
Off
13 C. pcoe
J6 BSM
Gnd Tx/Rx
Two Conductor Shielded Cable.
Field bus 1
AFS AIR FLOW SWITCH
CB CIRCUIT BREAKER
CCH CRANKCASE HEATER
DS DAMPER SWITCH
DFS DIRTY FILTER SWITCH
LPT LIQUID PRESSURE TRANSDUCER
EEV ELECTRONIC EXPANSION VALVE
PS PANEL SWITCH
FS FREEZE SENSOR
HPALA HIGH PRESSURE ALARM
HPC HIGH PRESSURE CONTROL
LLT LIQUID LINE TEMPERATURE
MAT MIXTURE AIR TEMPERATURE
OATH OUTDOOR TEMP. AND HUMIDITY SENSOR
RAT RETURN AIR TEMPERATURE
SAT SUPPLY AIR TEMPERATURE
SP SUCTION PRESSURE
ST SUCTION TEMPERATURE
R RELAY COIL
C CONTACTOR COIL
TB= TERMINAL BLOCK
FILTER LIGHT
TERMINAL BLOCK (WITH NUMBER DESIGNATION)
4212-305 A