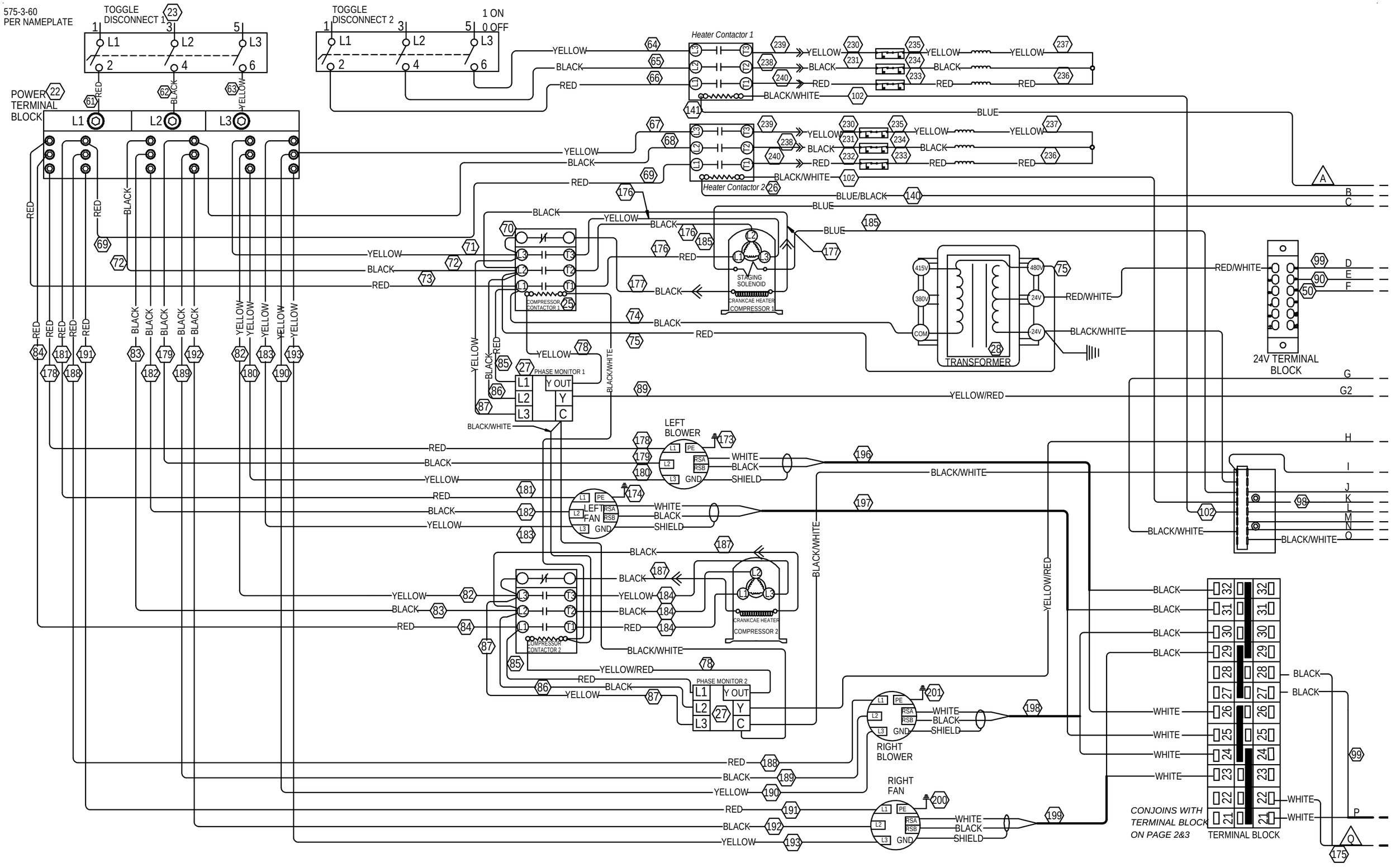
575-3-60
PER NAMEPLATE
TOGGLE DISCONNECT 1
TOGGLE DISCONNECT 2
1 ON
0 OFF
POWER TERMINAL BLOCK
Heater Contactor 1
Heater Contactor 2
COMPRESSOR CONTACTOR 1
COMPRESSOR CONTACTOR 2
STAGING SOLENOID
CRANKCAE HEATER COMPRESSOR 1
CRANKCAE HEATER COMPRESSOR 2
PHASE MONITOR 1
PHASE MONITOR 2
TRANSFORMER
24V TERMINAL BLOCK
LEFT BLOWER
LEFT FAN
RIGHT BLOWER
RIGHT FAN
TERMINAL BLOCK
CONJOINS WITH TERMINAL BLOCK ON PAGE 2&3
4212-310-1

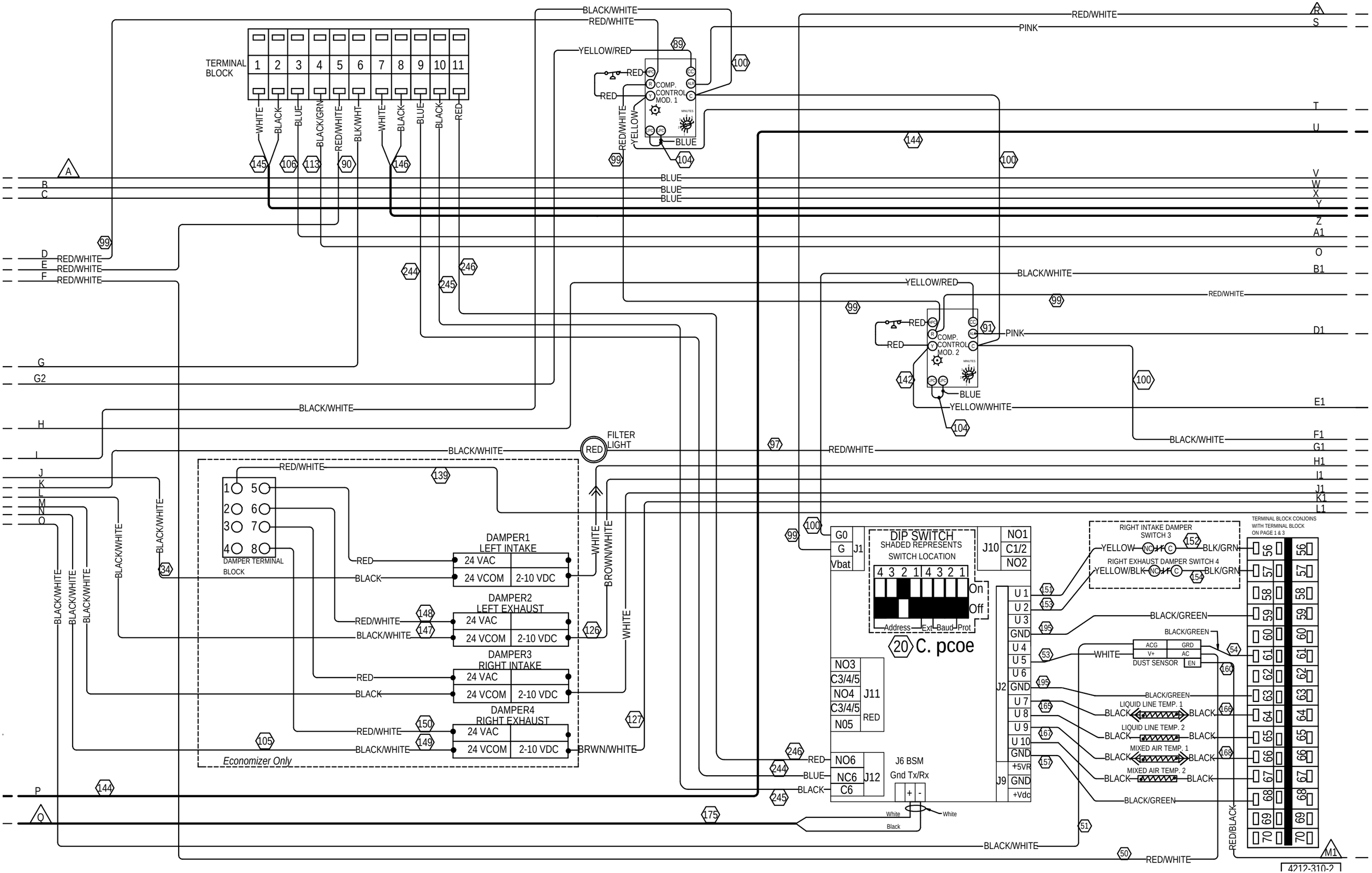

TERMINAL BLOCK
1 2 3 4 5 6 7 8 9 10 11
WHITE BLACK BLUE BLACK/GRN RED/WHITE BLK/WHT WHITE BLACK BLUE BLACK RED
BLACK/WHITE
RED/WHITE
YELLOW/RED
RED
COMP. CONTROL MOD. 1
BLUE
RED/WHITE
YELLOW
PINK
COMP. CONTROL MOD. 2
YELLOW/WHITE
FILTER LIGHT
DAMPER TERMINAL BLOCK
DAMPER1 LEFT INTAKE
DAMPER2 LEFT EXHAUST
DAMPER3 RIGHT INTAKE
DAMPER4 RIGHT EXHAUST
24 VAC
24 VCOM
2-10 VDC
BROWN/WHITE
BRWN/WHITE
Economizer Only
DIP SWITCH
SHADED REPRESENTS SWITCH LOCATION
On
Off
Address Ext Baud Prot
20 C. pcoe
J1 G0 G Vbat
J10 NO1 C1/2 NO2
J11 NO3 C3/4/5 NO4 C3/4/5 N05 RED
J12 NO6 NC6 C6
J6 BSM Gnd Tx/Rx
J2 U 1 U 2 U 3 GND U 4 U 5 U 6 GND U 7 U 8 U 9 U 10 GND
J9 +5VR GND +Vdc
RIGHT INTAKE DAMPER SWITCH 3
RIGHT EXHAUST DAMPER SWITCH 4
YELLOW BLK/GRN
YELLOW/BLK BLK/GRN
BLACK/GREEN
WHITE
DUST SENSOR
ACG GRD V+ AC EN
LIQUID LINE TEMP. 1
LIQUID LINE TEMP. 2
MIXED AIR TEMP. 1
MIXED AIR TEMP. 2
TERMINAL BLOCK CONJOINS WITH TERMINAL BLOCK ON PAGE 1 & 3
RED/BLACK
4212-310-2

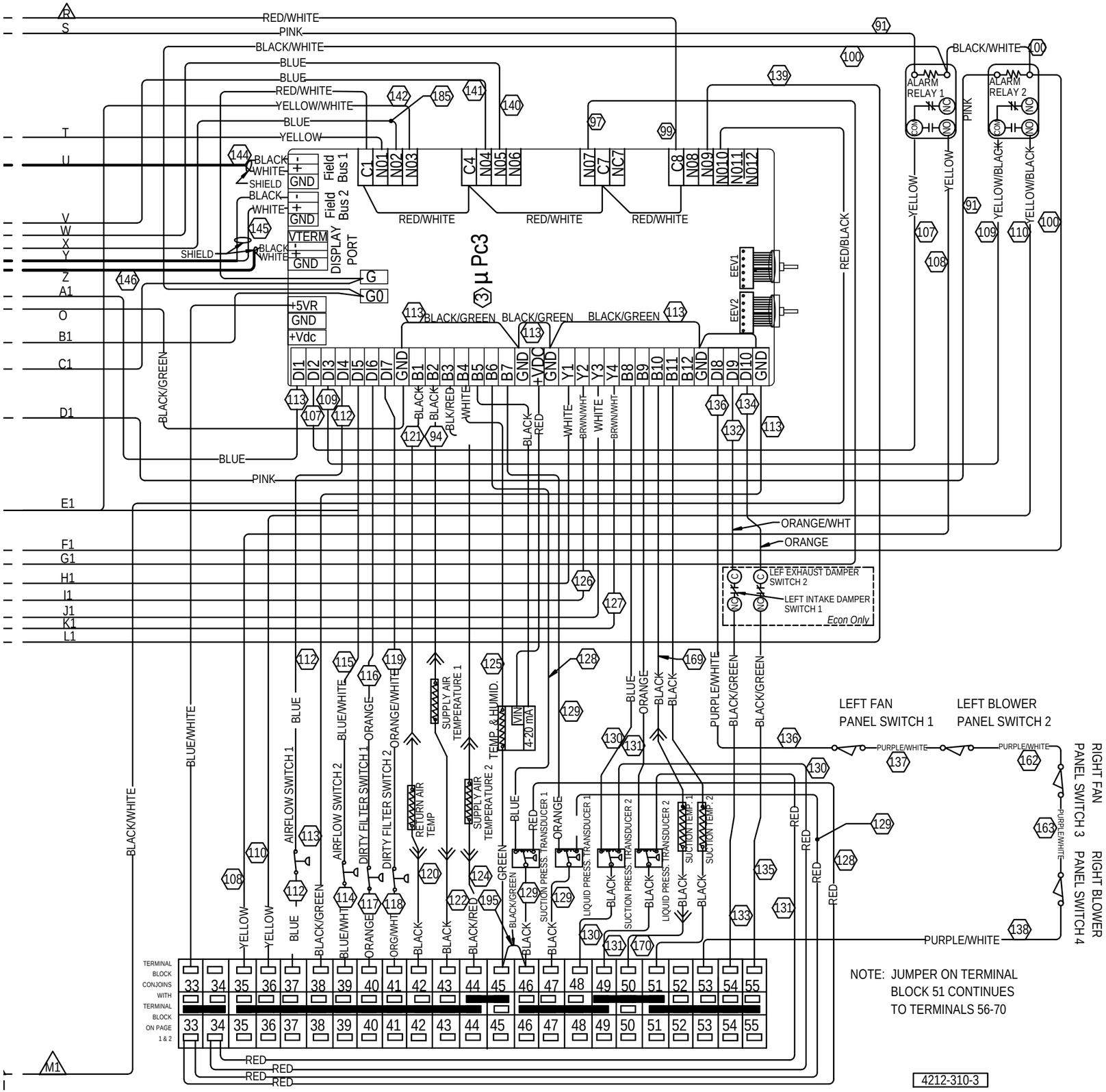
RED/WHITE
PINK
BLACK/WHITE
BLUE
YELLOW/WHITE
YELLOW
ALARM RELAY 1
ALARM RELAY 2
COM
NO
NC
Field Bus 1
Field Bus 2
DISPLAY PORT
VTERM
GND
SHIELD
C1 N01 N02 N03 C4 N04 N05 N06 N07 C7 NC7 C8 N08 N09 N010 N011 N012
µ Pc3
EEV1
EEV2
G
G0
+5VR
+Vdc
DI1 DI2 DI3 DI4 DI5 DI6 DI7 GND B1 B2 B3 B4 B5 B6 B7 GND +VDC GND Y1 Y2 Y3 Y4 B8 B9 B10 B11 B12 GND DI8 DI9 DI10 GND
BLACK/GREEN
BLACK/RED
WHITE
BRWN/WHT
RED
ORANGE/WHT
ORANGE
LEF EXHAUST DAMPER SWITCH 2
LEFT INTAKE DAMPER SWITCH 1
Econ Only
BLUE/WHITE
AIRFLOW SWITCH 1
AIRFLOW SWITCH 2
DIRTY FILTER SWITCH 1
DIRTY FILTER SWITCH 2
RETURN AIR TEMP
SUPPLY AIR TEMPERATURE 1
SUPPLY AIR TEMPERATURE 2
TEMP. & HUMID.
VIN
4-20 mA
SUCTION PRESS. TRANSDUCER 1
LIQUID PRESS. TRANSDUCER 1
SUCTION PRESS. TRANSDUCER 2
LIQUID PRESS. TRANSDUCER 2
SUCTION TEMP. 1
SUCTION TEMP. 2
PURPLE/WHITE
LEFT FAN PANEL SWITCH 1
LEFT BLOWER PANEL SWITCH 2
RIGHT FAN PANEL SWITCH 3
RIGHT BLOWER PANEL SWITCH 4
TERMINAL BLOCK CONJOINS WITH TERMINAL BLOCK ON PAGE 1 & 2
33 34 35 36 37 38 39 40 41 42 43 44 45 46 47 48 49 50 51 52 53 54 55
NOTE: JUMPER ON TERMINAL BLOCK 51 CONTINUES TO TERMINALS 56-70
4212-310-3