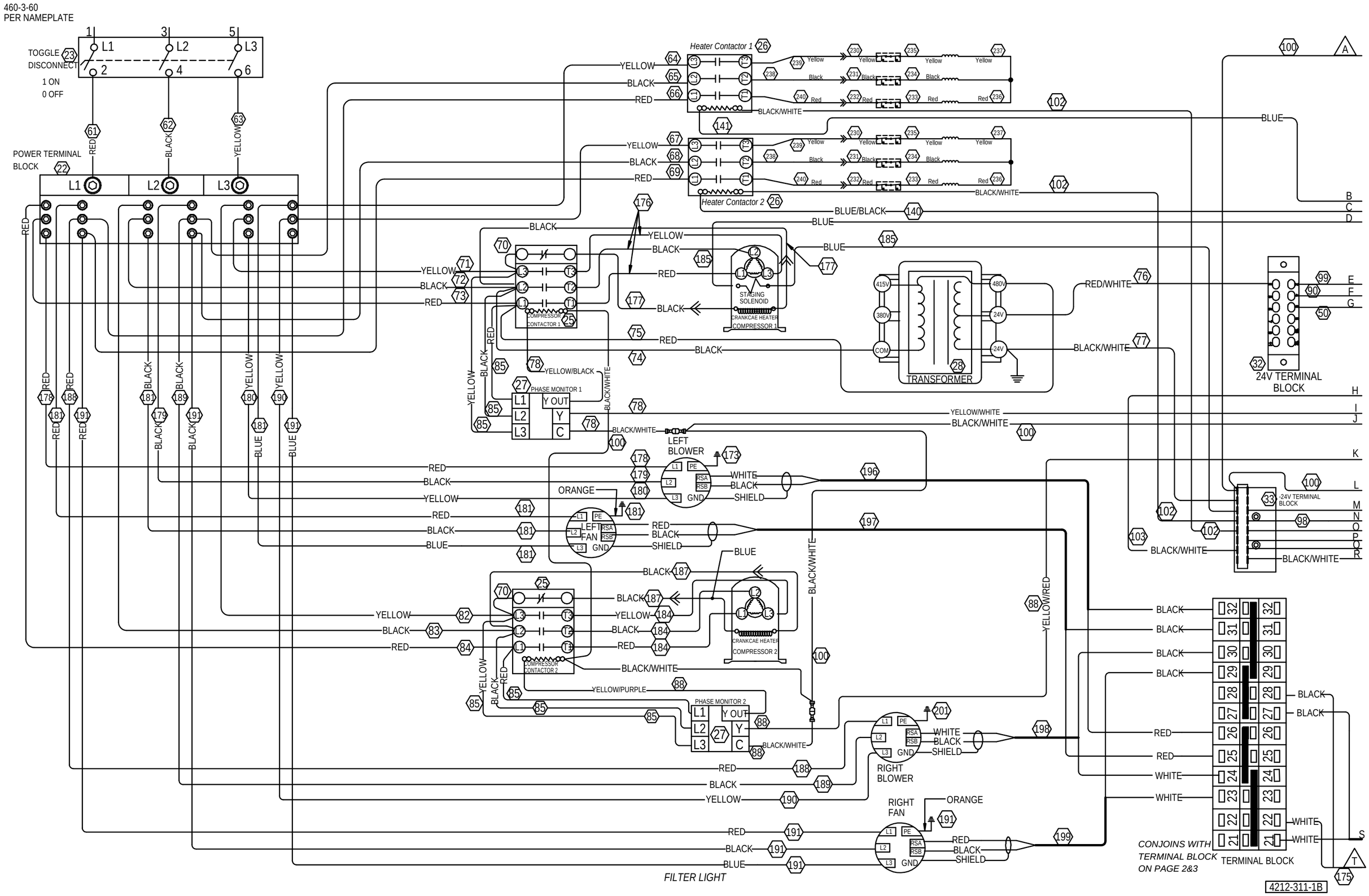
460-3-60
PER NAMEPLATE
TOGGLE DISCONNECT
1 ON
0 OFF
POWER TERMINAL BLOCK
Heater Contactor 1
Heater Contactor 2
COMPRESSOR CONTACTOR 1
COMPRESSOR CONTACTOR 2
PHASE MONITOR 1
PHASE MONITOR 2
STAGING SOLENOID
CRANKCAE HEATER COMPRESSOR 1
CRANKCAE HEATER COMPRESSOR 2
TRANSFORMER
24V TERMINAL BLOCK
-24V TERMINAL BLOCK
LEFT BLOWER
LEFT FAN
RIGHT BLOWER
RIGHT FAN
FILTER LIGHT
TERMINAL BLOCK
CONJOINS WITH TERMINAL BLOCK ON PAGE 2&3
4212-311-1B

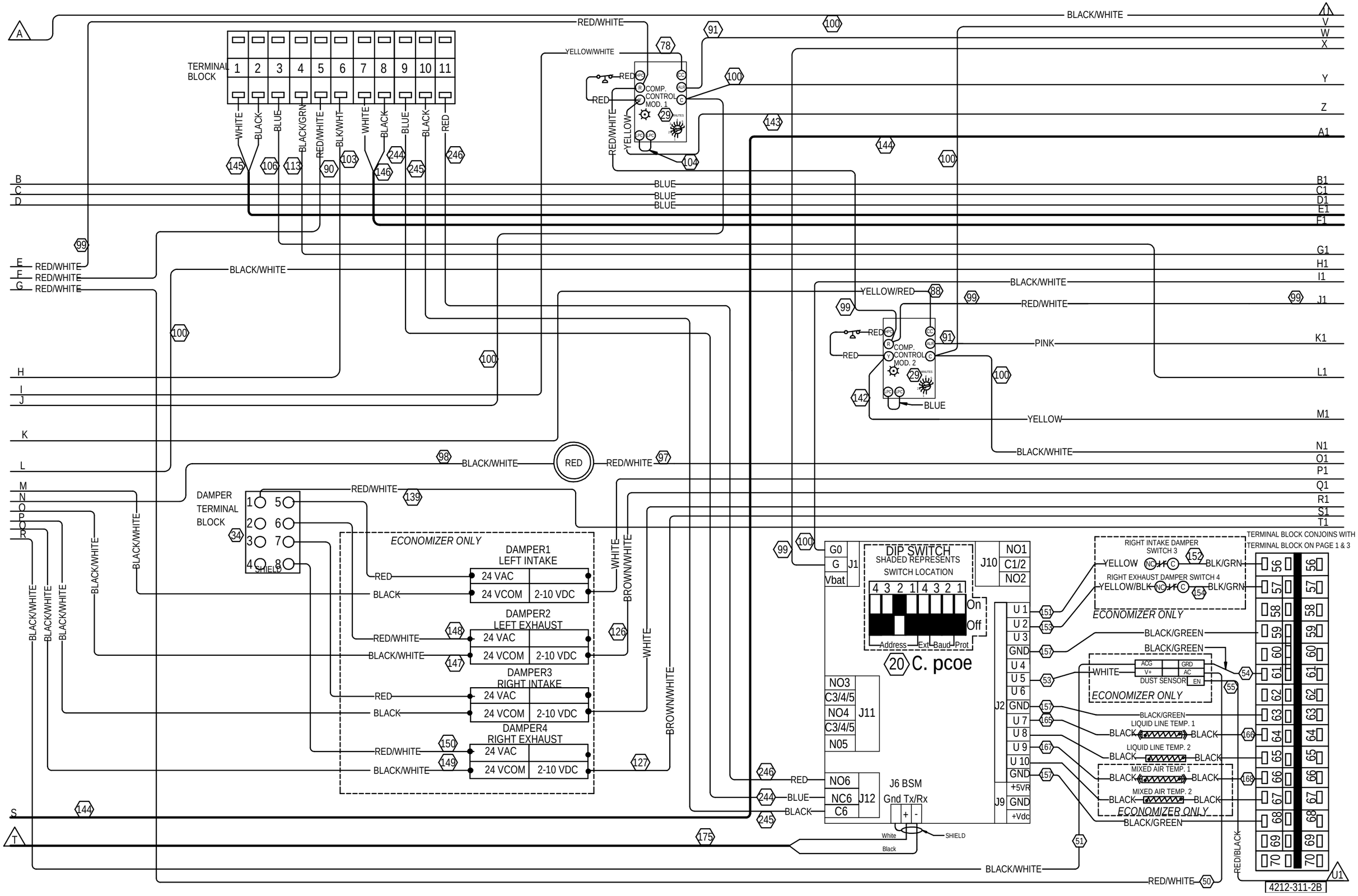
TERMINAL BLOCK
1 2 3 4 5 6 7 8 9 10 11
WHITE
BLACK
BLUE
BLACK/GRN
RED/WHITE
BLK/WHT
WHITE
BLACK
BLUE
BLACK
RED
RED/WHITE
YELLOW/WHITE
RED
COMP. CONTROL MOD. 1
RED/WHITE
YELLOW
BLUE
BLUE
BLUE
BLACK/WHITE
YELLOW/RED
RED
COMP. CONTROL MOD. 2
BLUE
PINK
YELLOW
BLACK/WHITE
RED
RED/WHITE
DAMPER TERMINAL BLOCK
SHIELD
ECONOMIZER ONLY
DAMPER1 LEFT INTAKE
24 VAC
24 VCOM
2-10 VDC
DAMPER2 LEFT EXHAUST
DAMPER3 RIGHT INTAKE
DAMPER4 RIGHT EXHAUST
G0
G
Vbat
J1
DIP SWITCH
SHADED REPRESENTS SWITCH LOCATION
4 3 2 1 4 3 2 1
On
Off
Address Ext Baud Prot
20 C. pcoe
J10
NO1
C1/2
NO2
NO3
C3/4/5
NO4
C3/4/5
NO5
J11
NO6
NC6
C6
J12
J6 BSM
Gnd Tx/Rx
White
Black
J2
U 1
U 2
U 3
GND
U 4
U 5
U 6
GND
U 7
U 8
U 9
U 10
GND
J9
+5VR
GND
+Vdc
RIGHT INTAKE DAMPER SWITCH 3
YELLOW
BLK/GRN
RIGHT EXHAUST DAMPER SWITCH 4
YELLOW/BLK
BLK/GRN
ECONOMIZER ONLY
BLACK/GREEN
WHITE
DUST SENSOR
ECONOMIZER ONLY
LIQUID LINE TEMP. 1
LIQUID LINE TEMP. 2
MIXED AIR TEMP. 1
MIXED AIR TEMP. 2
ECONOMIZER ONLY
TERMINAL BLOCK CONJOINS WITH TERMINAL BLOCK ON PAGE 1 & 3
RED/BLACK
4212-311-2B

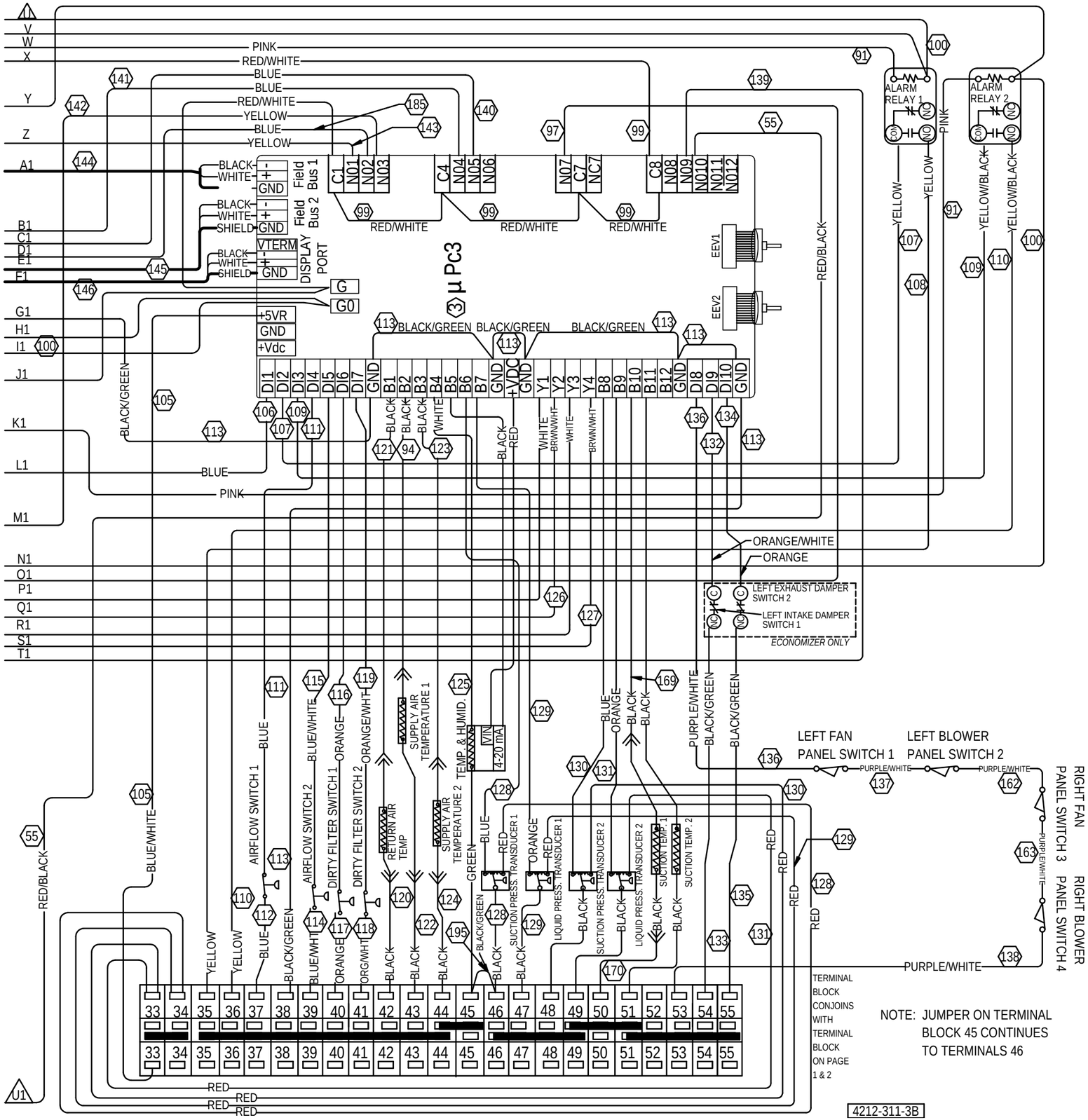
ALARM RELAY 1
ALARM RELAY 2
Field Bus 1
Field Bus 2
DISPLAY PORT
µ Pc3
EEV1
EEV2
LEFT EXHAUST DAMPER SWITCH 2
LEFT INTAKE DAMPER SWITCH 1
ECONOMIZER ONLY
ORANGE/WHITE
ORANGE
AIRFLOW SWITCH 1
AIRFLOW SWITCH 2
DIRTY FILTER SWITCH 1
DIRTY FILTER SWITCH 2
RETURN AIR TEMP
SUPPLY AIR TEMPERATURE 1
SUPPLY AIR TEMPERATURE 2
TEMP. & HUMID.
4-20 mA
LIQUID PRESS. TRANSDUCER 1
SUCTION PRESS. TRANSDUCER 1
SUCTION PRESS. TRANSDUCER 2
LIQUID PRESS. TRANSDUCER 2
SUCTION TEMP. 1
SUCTION TEMP. 2
LEFT FAN PANEL SWITCH 1
LEFT BLOWER PANEL SWITCH 2
RIGHT FAN PANEL SWITCH 3
RIGHT BLOWER PANEL SWITCH 4
TERMINAL BLOCK CONJOINS WITH TERMINAL BLOCK ON PAGE 1 & 2
NOTE: JUMPER ON TERMINAL BLOCK 45 CONTINUES TO TERMINALS 46
4212-311-3B