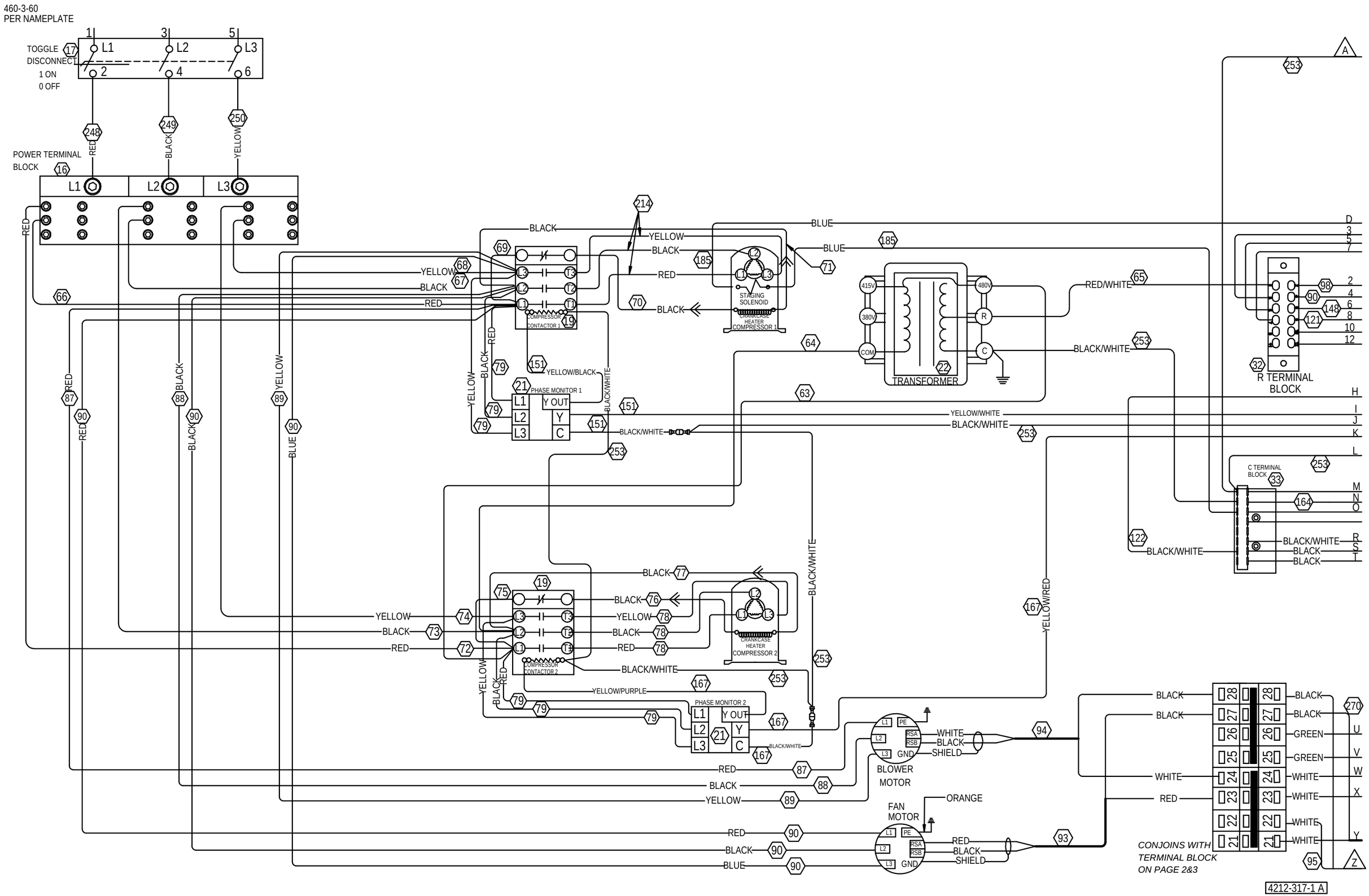
460-3-60
PER NAMEPLATE
TOGGLE DISCONNECT
1 ON
0 OFF
POWER TERMINAL BLOCK
COMPRESSOR CONTACTOR 1
PHASE MONITOR 1
STAGING SOLENOID
CRANKCASE HEATER COMPRESSOR 1
TRANSFORMER
R TERMINAL BLOCK
C TERMINAL BLOCK
COMPRESSOR CONTACTOR 2
PHASE MONITOR 2
CRANKCASE HEATER COMPRESSOR 2
BLOWER MOTOR
FAN MOTOR
CONJOINS WITH TERMINAL BLOCK ON PAGE 2&3
4212-317-1 A

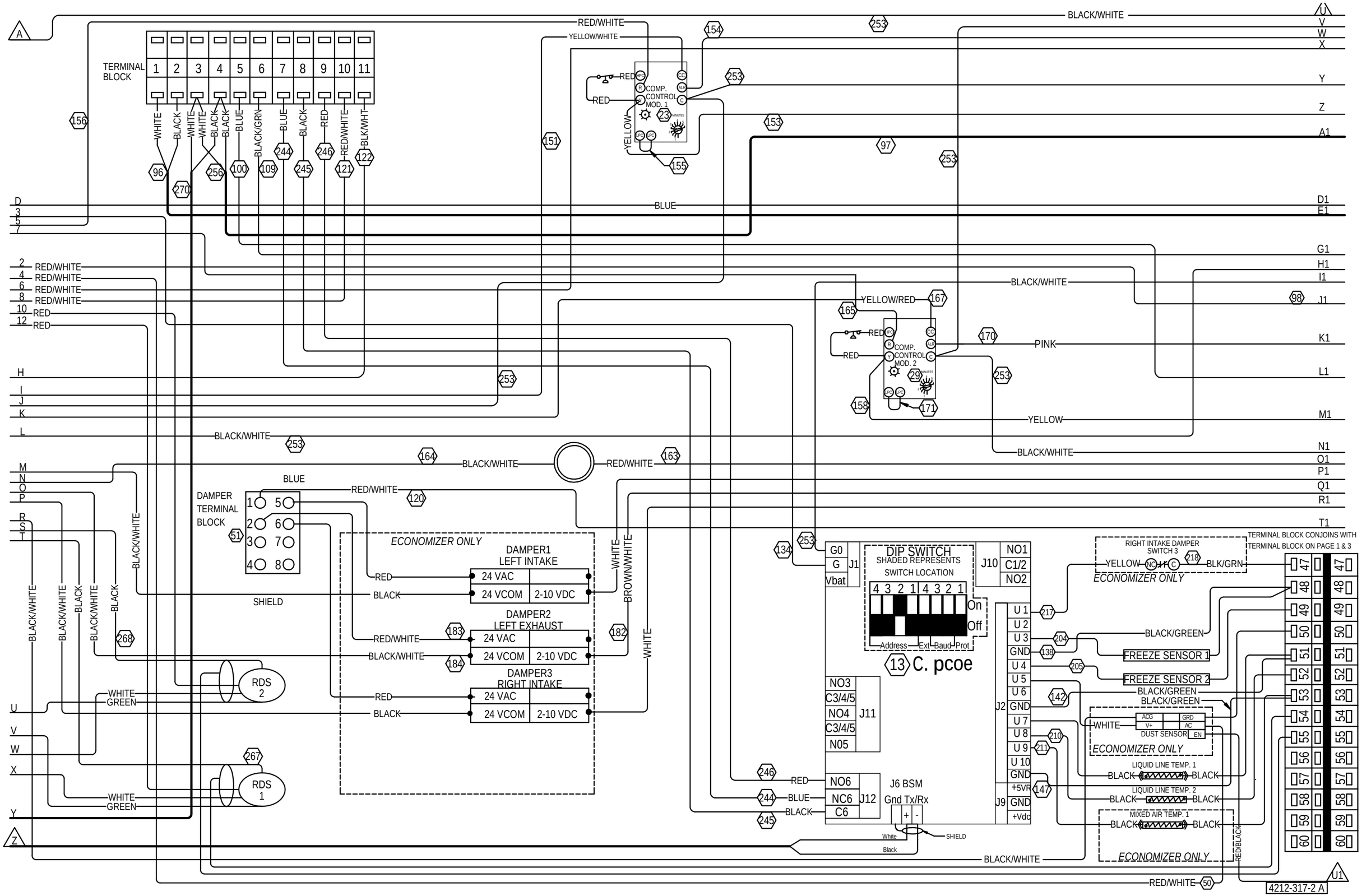

TERMINAL BLOCK
1 2 3 4 5 6 7 8 9 10 11
WHITE
BLACK
WHITE
WHITE
BLACK
BLACK
BLUE
BLACK/GRN
BLUE
BLACK
RED
RED/WHITE
BLK/WHT
RED/WHITE
YELLOW/WHITE
BLACK/WHITE
COMP. CONTROL MOD. 1
YELLOW
BLUE
COMP. CONTROL MOD. 2
YELLOW/RED
PINK
YELLOW
DAMPER TERMINAL BLOCK
BLUE
RED/WHITE
SHIELD
ECONOMIZER ONLY
DAMPER1 LEFT INTAKE
24 VAC
24 VCOM
2-10 VDC
DAMPER2 LEFT EXHAUST
DAMPER3 RIGHT INTAKE
RED
BLACK
WHITE
BROWN/WHITE
RDS 2
RDS 1
WHITE
GREEN
DIP SWITCH
SHADED REPRESENTS SWITCH LOCATION
4 3 2 1 4 3 2 1
On
Off
Address Ext Baud Prot
13 C. pcoe
G0
G
Vbat
J1
J10
NO1
C1/2
NO2
NO3
C3/4/5
NO4
C3/4/5
N05
J11
NO6
NC6
C6
J12
J6 BSM
Gnd Tx/Rx
White
Black
SHIELD
U 1
U 2
U 3
GND
U 4
U 5
U 6
GND
U 7
U 8
U 9
U 10
GND
+5VR
GND
+Vdc
J2
J9
RIGHT INTAKE DAMPER SWITCH 3
YELLOW
BLK/GRN
ECONOMIZER ONLY
TERMINAL BLOCK CONJOINS WITH TERMINAL BLOCK ON PAGE 1 & 3
BLACK/GREEN
FREEZE SENSOR 1
FREEZE SENSOR 2
BLACK/GREEN
BLACK/GREEN
WHITE
ACG
GRD
V+
AC
DUST SENSOR
EN
ECONOMIZER ONLY
LIQUID LINE TEMP. 1
LIQUID LINE TEMP. 2
MIXED AIR TEMP. 1
BLACK
RED/BLACK
ECONOMIZER ONLY
RED/WHITE
4212-317-2 A

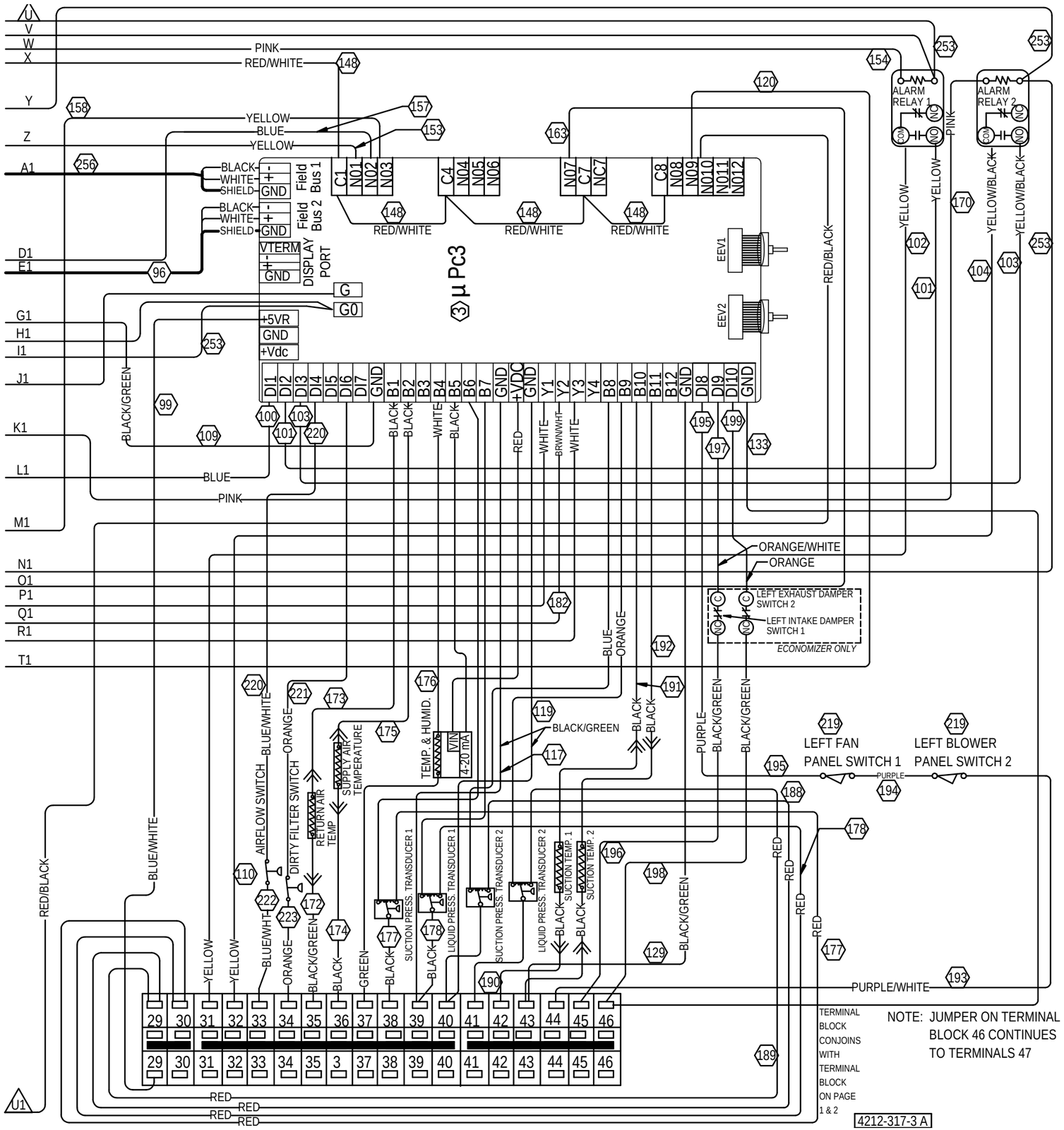
U
V
W
X
Y
Z
A1
D1
E1
G1
H1
I1
J1
K1
L1
M1
N1
O1
P1
Q1
R1
T1
PINK
RED/WHITE
YELLOW
BLUE
YELLOW
BLACK
WHITE
SHIELD
GND
Field Bus 1
Field Bus 2
VTERM
DISPLAY PORT
G
G0
+5VR
GND
+Vdc
C1 NO1 NO2 NO3
C4 NO4 NO5 NO6
NO7 C7 NC7
C8 NO8 NO9 NO10 NO11 NO12
RED/WHITE
µPc3
EEV1
EEV2
RED/BLACK
ALARM RELAY 1
ALARM RELAY 2
COM
NO
YELLOW
YELLOW/BLACK
DI1 DI2 DI3 DI4 DI5 DI6 DI7 GND B1 B2 B3 B4 B5 B6 B7 GND +VDC GND Y1 Y2 Y3 Y4 B8 B9 B10 B11 B12 GND DI8 DI9 DI10 GND
BLACK/GREEN
BLACK
WHITE
RED
BRWN/WHT
ORANGE/WHITE
ORANGE
LEFT EXHAUST DAMPER SWITCH 2
LEFT INTAKE DAMPER SWITCH 1
ECONOMIZER ONLY
BLUE
PURPLE
LEFT FAN PANEL SWITCH 1
LEFT BLOWER PANEL SWITCH 2
PURPLE/WHITE
AIRFLOW SWITCH
BLUE/WHITE
DIRTY FILTER SWITCH
RETURN AIR TEMP
SUPPLY AIR TEMPERATURE
TEMP. & HUMID.
VIN
4-20 mA
SUCTION PRESS. TRANSDUCER 1
LIQUID PRESS. TRANSDUCER 1
SUCTION PRESS. TRANSDUCER 2
LIQUID PRESS. TRANSDUCER 2
SUCTION TEMP. 1
SUCTION TEMP. 2
GREEN
29 30 31 32 33 34 35 36 37 38 39 40 41 42 43 44 45 46
29 30 31 32 33 34 35 3 37 38 39 40 41 42 43 44 45 46
TERMINAL BLOCK CONJOINS WITH TERMINAL BLOCK ON PAGE 1 & 2
NOTE: JUMPER ON TERMINAL BLOCK 46 CONTINUES TO TERMINALS 47
U1
4212-317-3 A