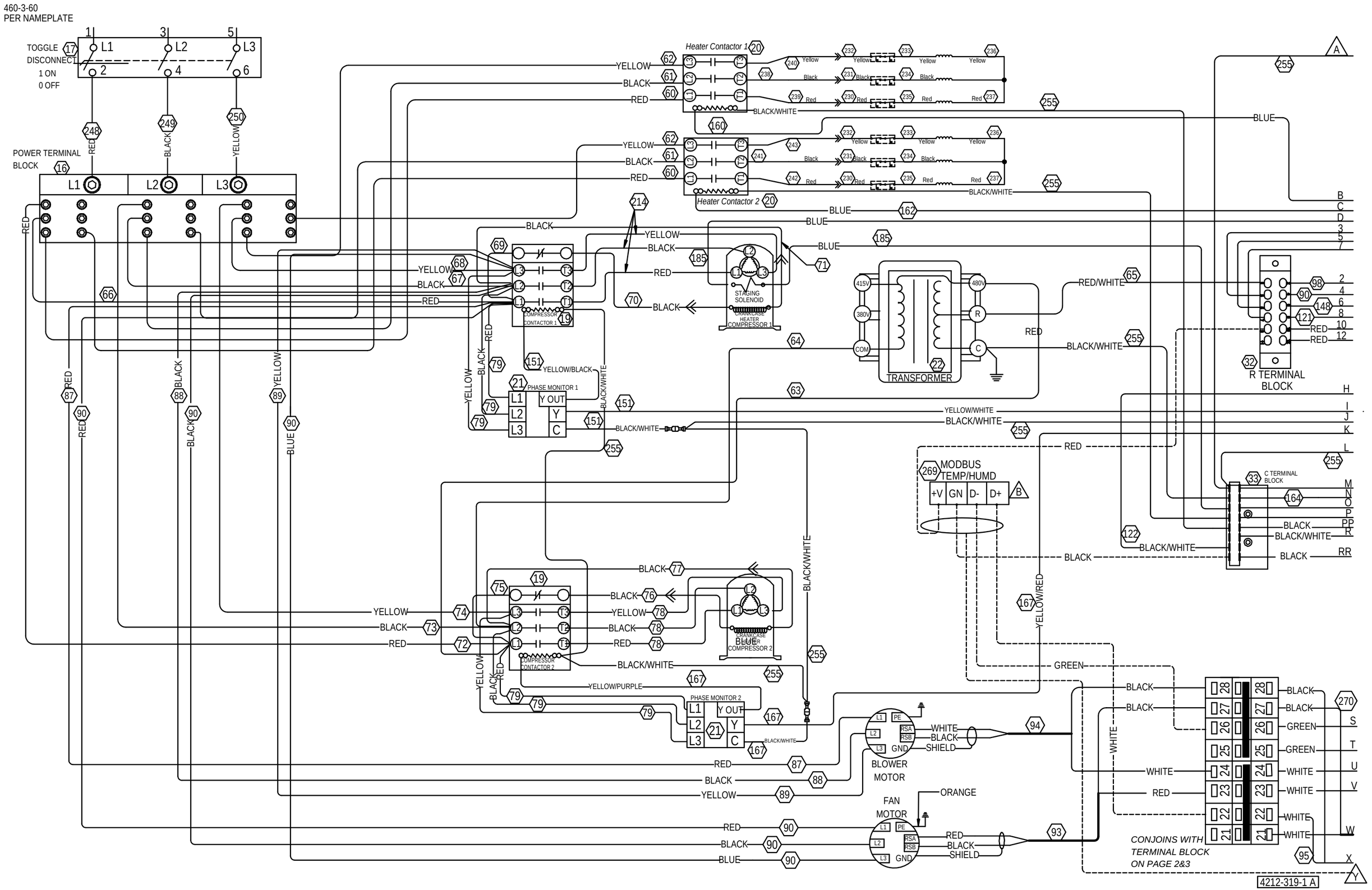
460-3-60
PER NAMEPLATE
TOGGLE DISCONNECT
1 ON
0 OFF
POWER TERMINAL BLOCK
Heater Contactor 1
Heater Contactor 2
COMPRESSOR CONTACTOR 1
COMPRESSOR CONTACTOR 2
STAGING SOLENOID
CRANKCASE HEATER COMPRESSOR 1
CRANKCASE HEATER COMPRESSOR 2
TRANSFORMER
PHASE MONITOR 1
PHASE MONITOR 2
R TERMINAL BLOCK
C TERMINAL BLOCK
MODBUS TEMP/HUMD
+V GN D- D+
BLOWER MOTOR
FAN MOTOR
CONJOINS WITH TERMINAL BLOCK ON PAGE 2&3
4212-319-1 A

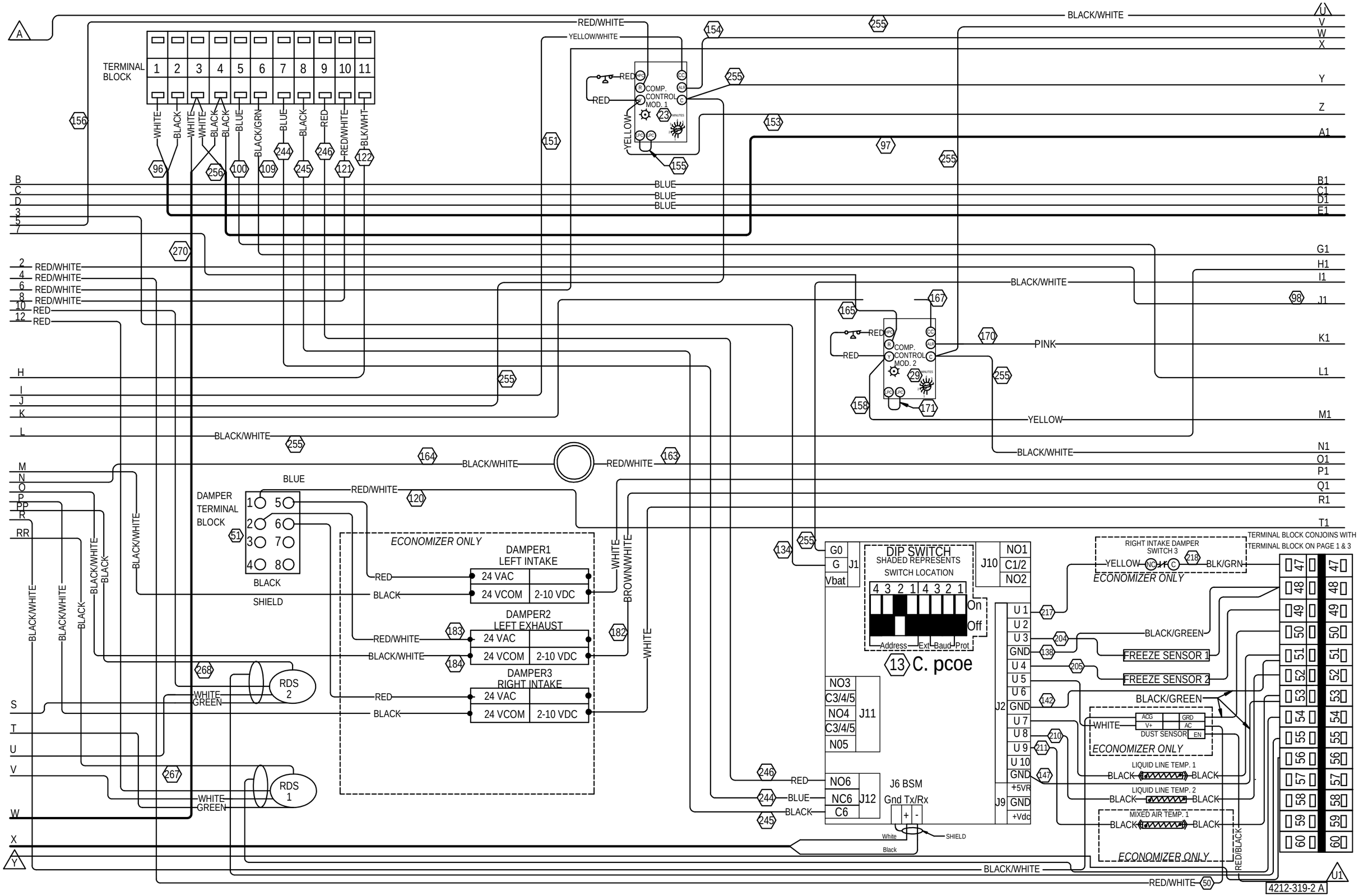
TERMINAL BLOCK
1 2 3 4 5 6 7 8 9 10 11
WHITE
BLACK
WHITE
WHITE
BLACK
BLACK
BLUE
BLACK/GRN
BLUE
BLACK
RED
RED/WHITE
BLK/WHT
RED/WHITE
YELLOW/WHITE
BLACK/WHITE
COMP. CONTROL MOD. 1
YELLOW
BLUE
BLUE
BLUE
COMP. CONTROL MOD. 2
PINK
YELLOW
BLACK/WHITE
DAMPER TERMINAL BLOCK
BLUE
BLACK
SHIELD
ECONOMIZER ONLY
DAMPER1 LEFT INTAKE
24 VAC
24 VCOM
2-10 VDC
DAMPER2 LEFT EXHAUST
DAMPER3 RIGHT INTAKE
RDS 2
RDS 1
WHITE
GREEN
BROWN/WHITE
DIP SWITCH
SHADED REPRESENTS SWITCH LOCATION
On
Off
Address Ext Baud Prot
C. pcoe
J1
J10
J11
J12
J2
J9
J6 BSM
Gnd Tx/Rx
SHIELD
RIGHT INTAKE DAMPER SWITCH 3
YELLOW
BLK/GRN
FREEZE SENSOR 1
FREEZE SENSOR 2
BLACK/GREEN
DUST SENSOR
LIQUID LINE TEMP. 1
LIQUID LINE TEMP. 2
MIXED AIR TEMP. 1
TERMINAL BLOCK CONJOINS WITH TERMINAL BLOCK ON PAGE 1 & 3
RED/BLACK
4212-319-2 A

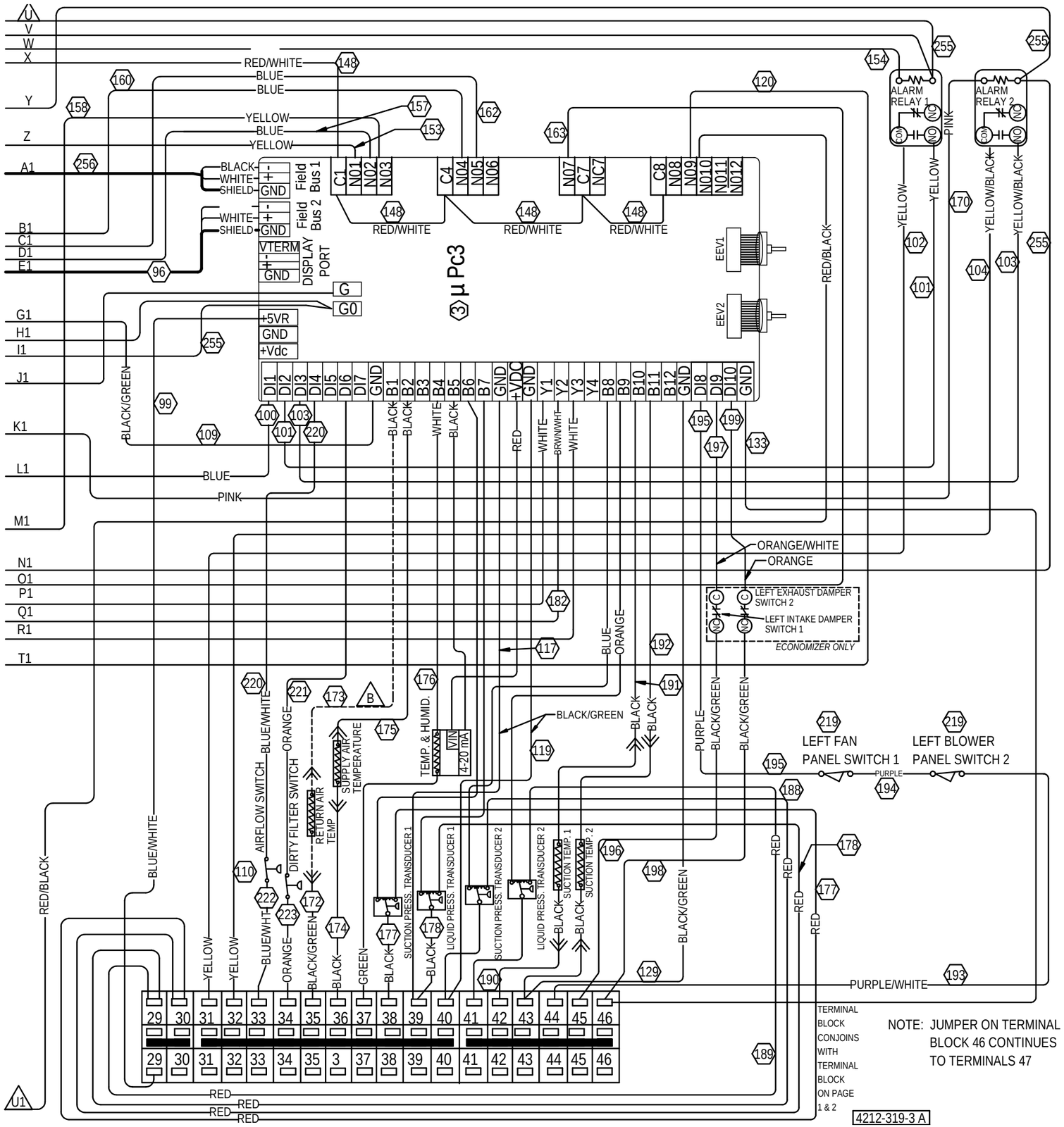

NOTE: JUMPER ON TERMINAL BLOCK 46 CONTINUES TO TERMINALS 47

B NOTE:UNITS WITH "E" AS TE SIXTH CHARACTER WILL HAVE THE "MODBUS TEMP/HUMID" SENSOR. UNITS WITH "P" WILL HAVE "RETURN AIR TEMP." SENSOR.