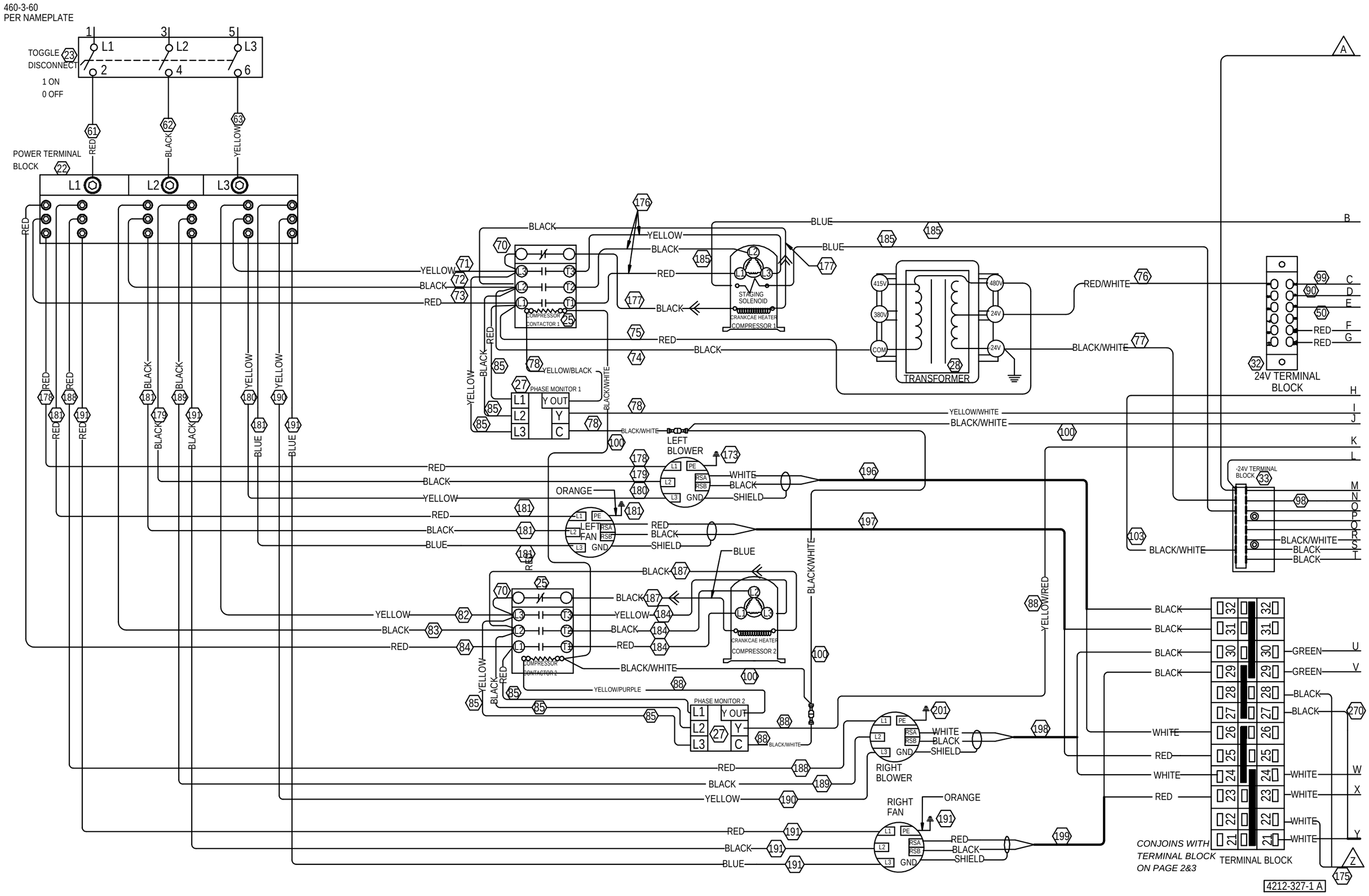
460-3-60
PER NAMEPLATE
TOGGLE DISCONNECT
1 ON
0 OFF
POWER TERMINAL BLOCK
COMPRESSOR CONTACTOR 1
STAGING SOLENOID
CRANKCAE HEATER
COMPRESSOR 1
TRANSFORMER
24V TERMINAL BLOCK
-24V TERMINAL BLOCK
PHASE MONITOR 1
LEFT BLOWER
LEFT FAN
COMPRESSOR CONTACTOR 2
CRANKCAE HEATER
COMPRESSOR 2
PHASE MONITOR 2
RIGHT BLOWER
RIGHT FAN
TERMINAL BLOCK
CONJOINS WITH TERMINAL BLOCK ON PAGE 2&3
4212-327-1 A

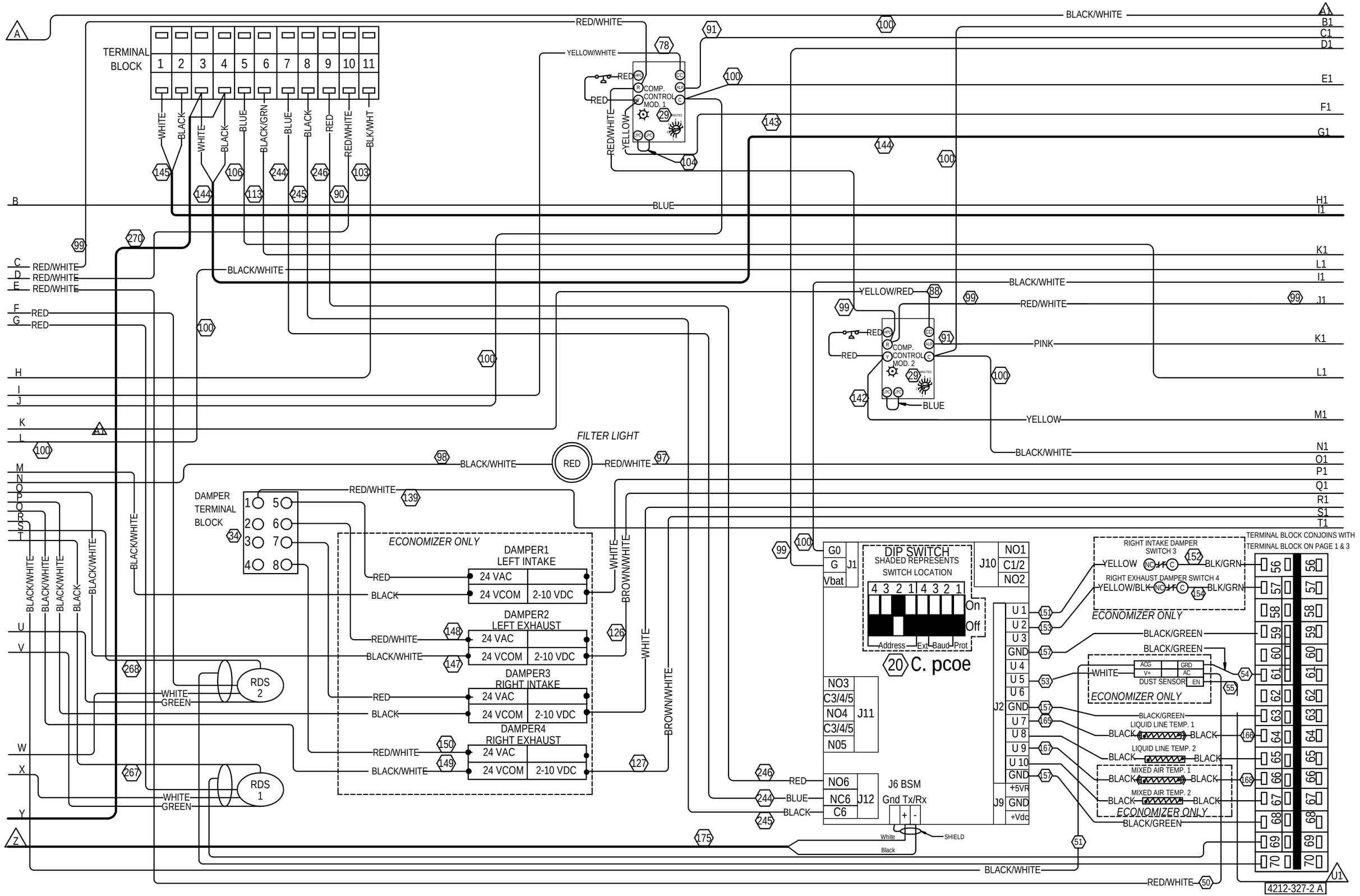
TERMINAL BLOCK
1 2 3 4 5 6 7 8 9 10 11
WHITE
BLACK
WHITE
BLACK
BLUE
BLACK/GRN
BLUE
BLACK
RED
RED/WHITE
BLK/WHT
RED/WHITE
YELLOW/WHITE
COMP. CONTROL MOD. 1
RED
RED
RED/WHITE
YELLOW
BLACK/WHITE
BLUE
RED/WHITE
RED/WHITE
RED/WHITE
RED
RED
BLACK/WHITE
YELLOW/RED
BLACK/WHITE
RED/WHITE
COMP. CONTROL MOD. 2
RED
RED
PINK
BLUE
YELLOW
BLACK/WHITE
FILTER LIGHT
RED
BLACK/WHITE
RED/WHITE
DAMPER TERMINAL BLOCK
RED/WHITE
ECONOMIZER ONLY
DAMPER1 LEFT INTAKE
24 VAC
24 VCOM
2-10 VDC
DAMPER2 LEFT EXHAUST
DAMPER3 RIGHT INTAKE
DAMPER4 RIGHT EXHAUST
RED
BLACK
RED/WHITE
BLACK/WHITE
WHITE
BROWN/WHITE
RDS 2
RDS 1
WHITE
GREEN
G0
G
Vbat
J1
DIP SWITCH
SHADED REPRESENTS SWITCH LOCATION
4 3 2 1 4 3 2 1
On
Off
Address Ext Baud Prot
20 C. pcoe
J10
NO1
C1/2
NO2
NO3
C3/4/5
NO4
C3/4/5
NO5
J11
NO6
NC6
C6
J12
J6 BSM
Gnd Tx/Rx
SHIELD
White
Black
J2
U 1
U 2
U 3
GND
U 4
U 5
U 6
GND
U 7
U 8
U 9
U 10
GND
J9
+5VR
GND
+Vdc
RIGHT INTAKE DAMPER SWITCH 3
YELLOW
BLK/GRN
RIGHT EXHAUST DAMPER SWITCH 4
YELLOW/BLK
BLK/GRN
ECONOMIZER ONLY
BLACK/GREEN
WHITE
DUST SENSOR
ECONOMIZER ONLY
LIQUID LINE TEMP. 1
LIQUID LINE TEMP. 2
MIXED AIR TEMP. 1
MIXED AIR TEMP. 2
ECONOMIZER ONLY
TERMINAL BLOCK CONJOINS WITH TERMINAL BLOCK ON PAGE 1 & 3
4212-327-2 A

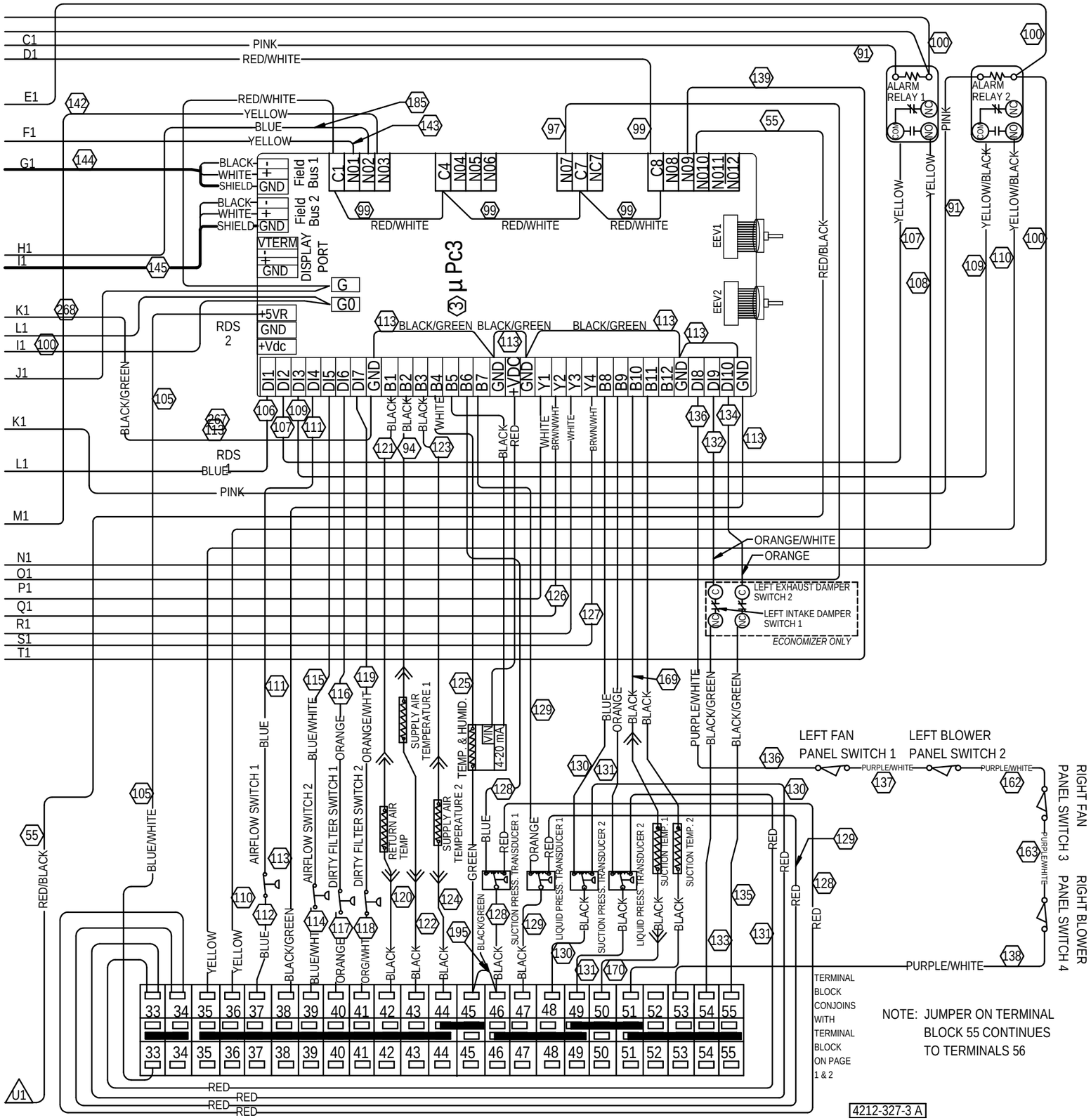
C1
D1
E1
F1
G1
H1
I1
K1
L1
I1
J1
K1
L1
M1
N1
O1
P1
Q1
R1
S1
T1
PINK
RED/WHITE
YELLOW
BLUE
BLACK
WHITE
SHIELD
GND
Field Bus 1
Field Bus 2
VTERM
DISPLAY PORT
G
G0
RDS 2
RDS 1
+5VR
+Vdc
µ Pc3
BLACK/GREEN
ALARM RELAY 1
ALARM RELAY 2
NC
NO
C
YELLOW/BLACK
EEV1
EEV2
RED/BLACK
ORANGE/WHITE
ORANGE
LEFT EXHAUST DAMPER SWITCH 2
LEFT INTAKE DAMPER SWITCH 1
ECONOMIZER ONLY
AIRFLOW SWITCH 1
AIRFLOW SWITCH 2
DIRTY FILTER SWITCH 1
DIRTY FILTER SWITCH 2
RETURN AIR TEMP
SUPPLY AIR TEMPERATURE 1
SUPPLY AIR TEMPERATURE 2
TEMP. & HUMID.
VIN
4-20 mA
LIQUID PRESS. TRANSDUCER 1
SUCTION PRESS. TRANSDUCER 1
SUCTION PRESS. TRANSDUCER 2
LIQUID PRESS. TRANSDUCER 2
SUCTION TEMP. 1
SUCTION TEMP. 2
PURPLE/WHITE
LEFT FAN PANEL SWITCH 1
LEFT BLOWER PANEL SWITCH 2
RIGHT FAN PANEL SWITCH 3
RIGHT BLOWER PANEL SWITCH 4
TERMINAL BLOCK CONJOINS WITH TERMINAL BLOCK ON PAGE 1 & 2
NOTE: JUMPER ON TERMINAL BLOCK 55 CONTINUES TO TERMINALS 56
U1
4212-327-3 A