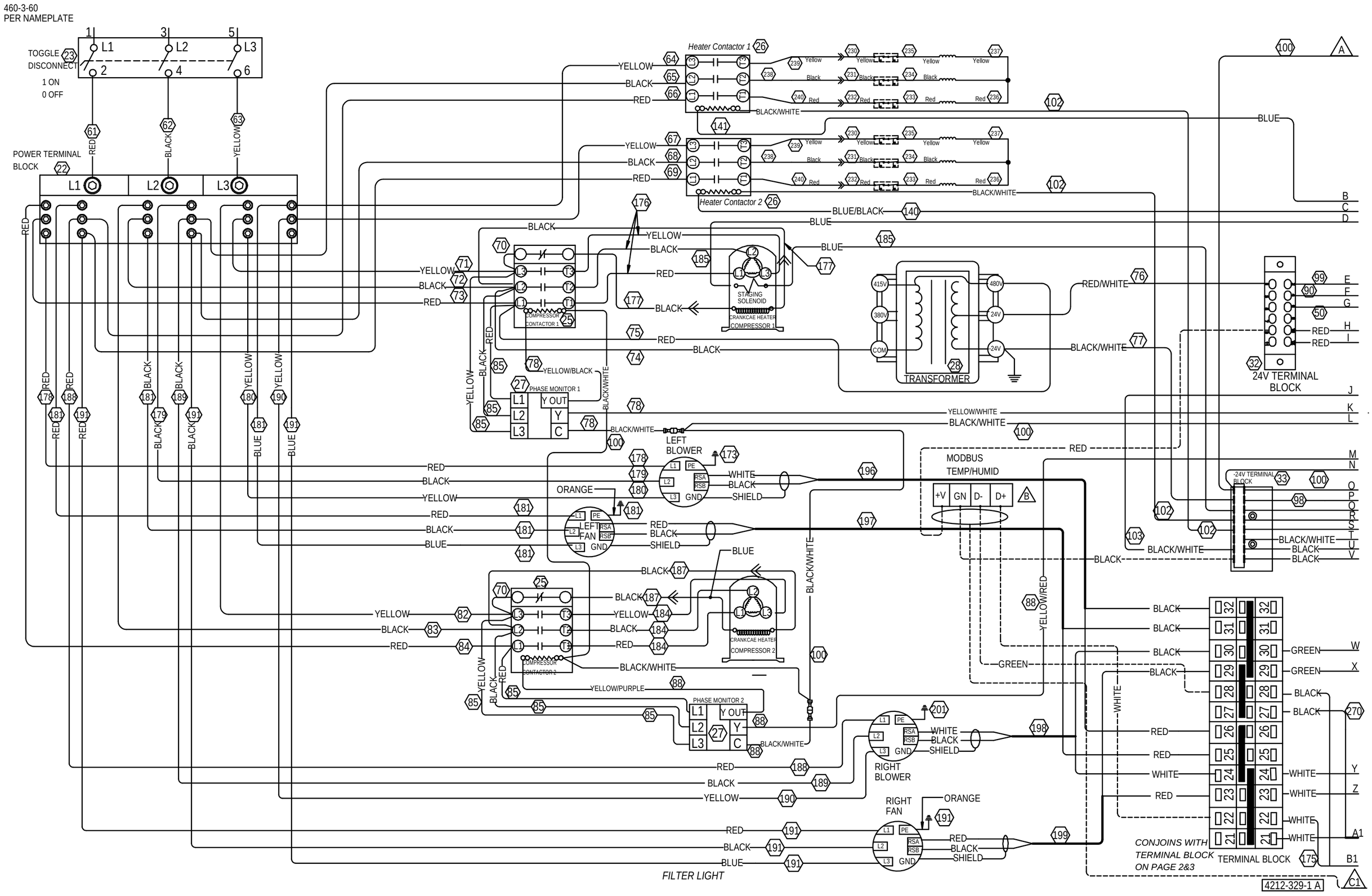
460-3-60
PER NAMEPLATE
TOGGLE DISCONNECT
1 ON
0 OFF
POWER TERMINAL BLOCK
Heater Contactor 1
Heater Contactor 2
COMPRESSOR CONTACTOR 1
COMPRESSOR CONTACTOR 2
PHASE MONITOR 1
PHASE MONITOR 2
STAGING SOLENOID
CRANKCAE HEATER COMPRESSOR 1
CRANKCAE HEATER COMPRESSOR 2
TRANSFORMER
24V TERMINAL BLOCK
-24V TERMINAL BLOCK
LEFT BLOWER
LEFT FAN
RIGHT BLOWER
RIGHT FAN
MODBUS TEMP/HUMID
+V GN D- D+
FILTER LIGHT
CONJOINS WITH TERMINAL BLOCK ON PAGE 2&3
TERMINAL BLOCK
4212-329-1 A

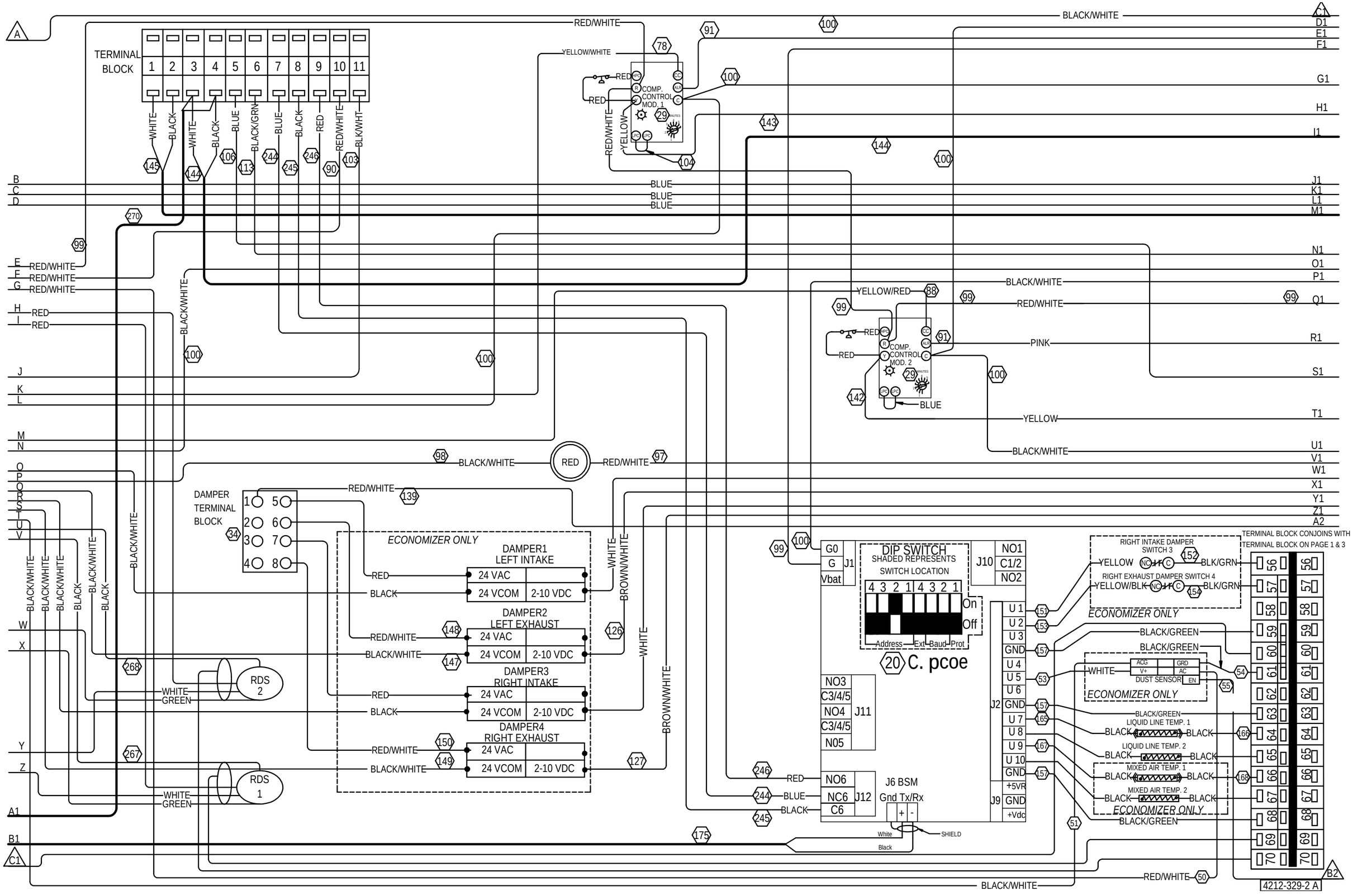
TERMINAL BLOCK
1 2 3 4 5 6 7 8 9 10 11
WHITE
BLACK
WHITE
BLACK
BLUE
BLACK/GRN
BLUE
BLACK
RED
RED/WHITE
BLK/WHT
RED/WHITE
YELLOW/WHITE
RED
COMP. CONTROL MOD. 1
RED/WHITE
YELLOW
BLUE
BLACK/WHITE
YELLOW/RED
COMP. CONTROL MOD. 2
PINK
YELLOW
DAMPER TERMINAL BLOCK
ECONOMIZER ONLY
DAMPER1 LEFT INTAKE
DAMPER2 LEFT EXHAUST
DAMPER3 RIGHT INTAKE
DAMPER4 RIGHT EXHAUST
24 VAC
24 VCOM
2-10 VDC
RDS 2
RDS 1
WHITE
GREEN
BROWN/WHITE
G0
G
Vbat
J1
DIP SWITCH
SHADED REPRESENTS SWITCH LOCATION
4 3 2 1 4 3 2 1
On
Off
Address Ext Baud Prot
20 C. pcoe
J10
NO1
C1/2
NO2
NO3
C3/4/5
NO4
C3/4/5
N05
J11
NO6
NC6
C6
J12
J6 BSM
Gnd Tx/Rx
SHIELD
White
Black
J2
U 1
U 2
U 3
GND
U 4
U 5
U 6
GND
U 7
U 8
U 9
U 10
GND
J9
+5VR
GND
+Vdc
RIGHT INTAKE DAMPER SWITCH 3
YELLOW
BLK/GRN
RIGHT EXHAUST DAMPER SWITCH 4
YELLOW/BLK
BLK/GRN
ECONOMIZER ONLY
BLACK/GREEN
WHITE
ACG
V+
GRD
AC
DUST SENSOR
EN
LIQUID LINE TEMP. 1
LIQUID LINE TEMP. 2
MIXED AIR TEMP. 1
MIXED AIR TEMP. 2
TERMINAL BLOCK CONJOINS WITH TERMINAL BLOCK ON PAGE 1 & 3
4212-329-2 A

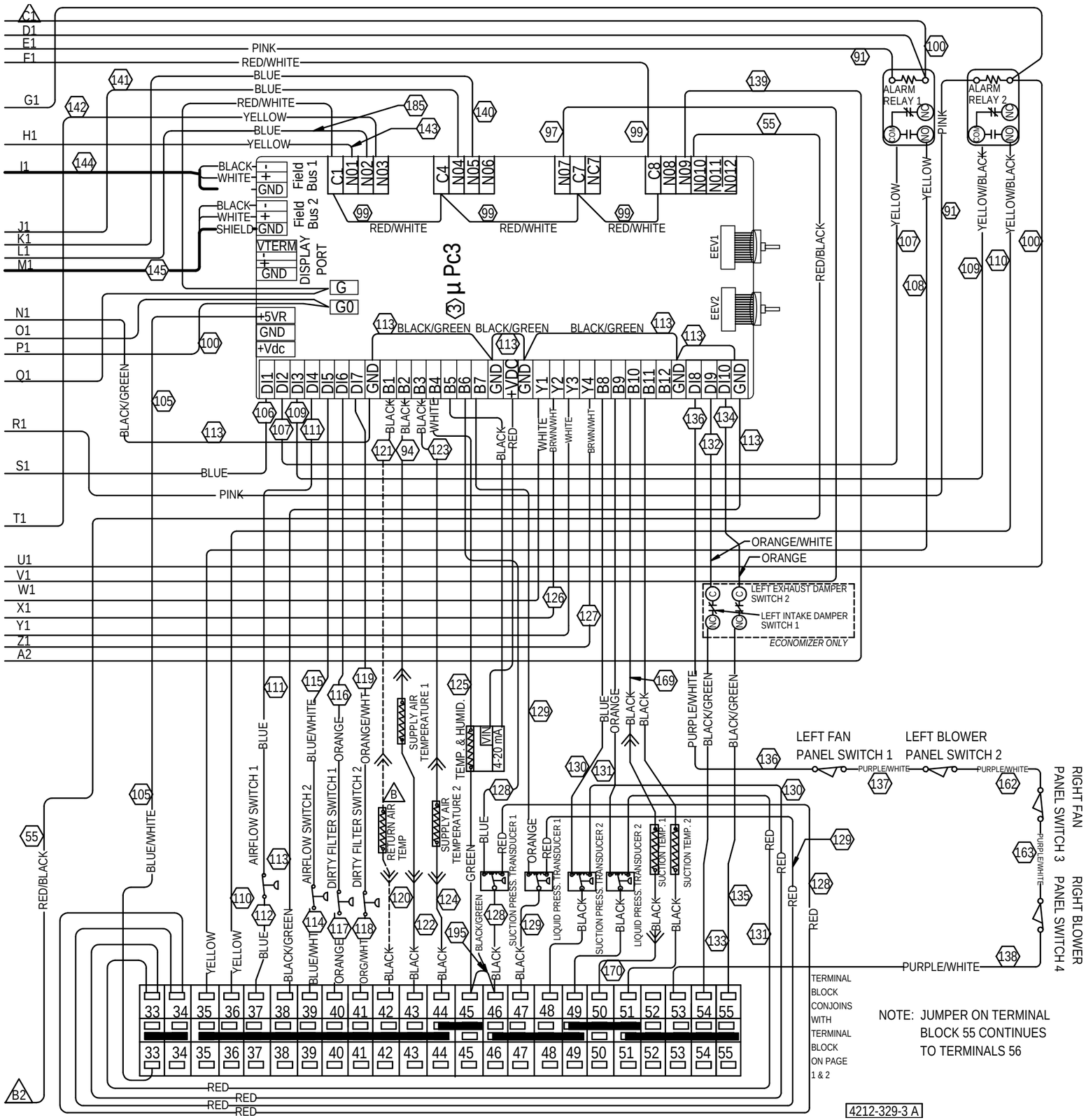

NOTE: JUMPER ON TERMINAL BLOCK 55 CONTINUES TO TERMINALS 56

B NOTE: UNITS WITH "E" AS THE SIXTH CHARACTER WILL HAVE THE "MODBUS TEMP/HUMID" SENSOR. UNITS WITH "P" WILL HAVE "RETURN AIR TEMP." SENSOR.