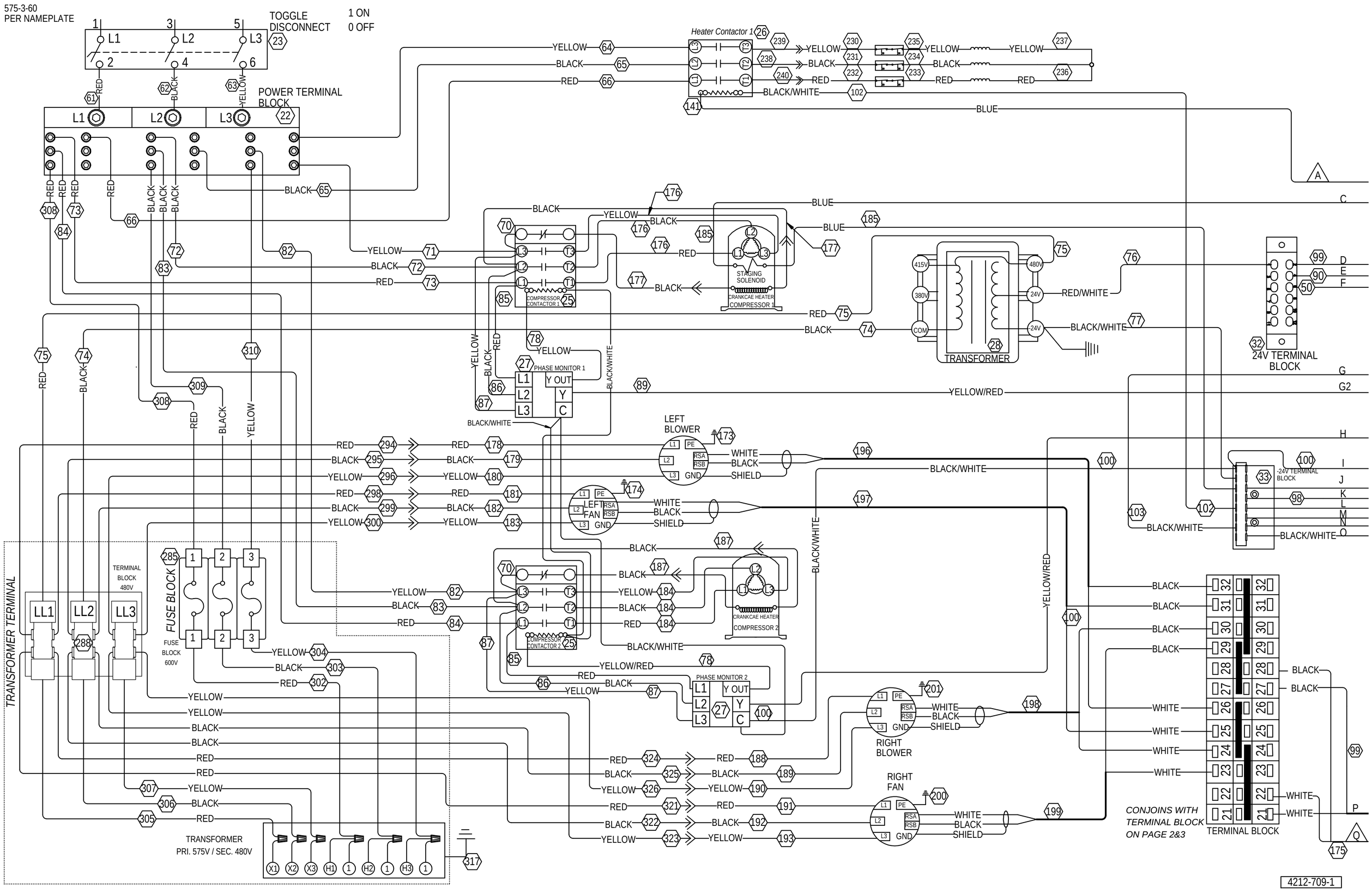
575-3-60
PER NAMEPLATE
TOGGLE DISCONNECT
1 ON
0 OFF
POWER TERMINAL BLOCK
Heater Contactor 1
COMPRESSOR CONTACTOR 1
STAGING SOLENOID
CRANKCAE HEATER
COMPRESSOR 1
TRANSFORMER
24V TERMINAL BLOCK
PHASE MONITOR 1
LEFT BLOWER
LEFT FAN
-24V TERMINAL BLOCK
COMPRESSOR CONTACTOR 2
CRANKCAE HEATER
COMPRESSOR 2
PHASE MONITOR 2
RIGHT BLOWER
RIGHT FAN
TRANSFORMER TERMINAL
TERMINAL BLOCK 480V
FUSE BLOCK
FUSE BLOCK 600V
TRANSFORMER
PRI. 575V / SEC. 480V
CONJOINS WITH TERMINAL BLOCK ON PAGE 2&3
TERMINAL BLOCK
4212-709-1

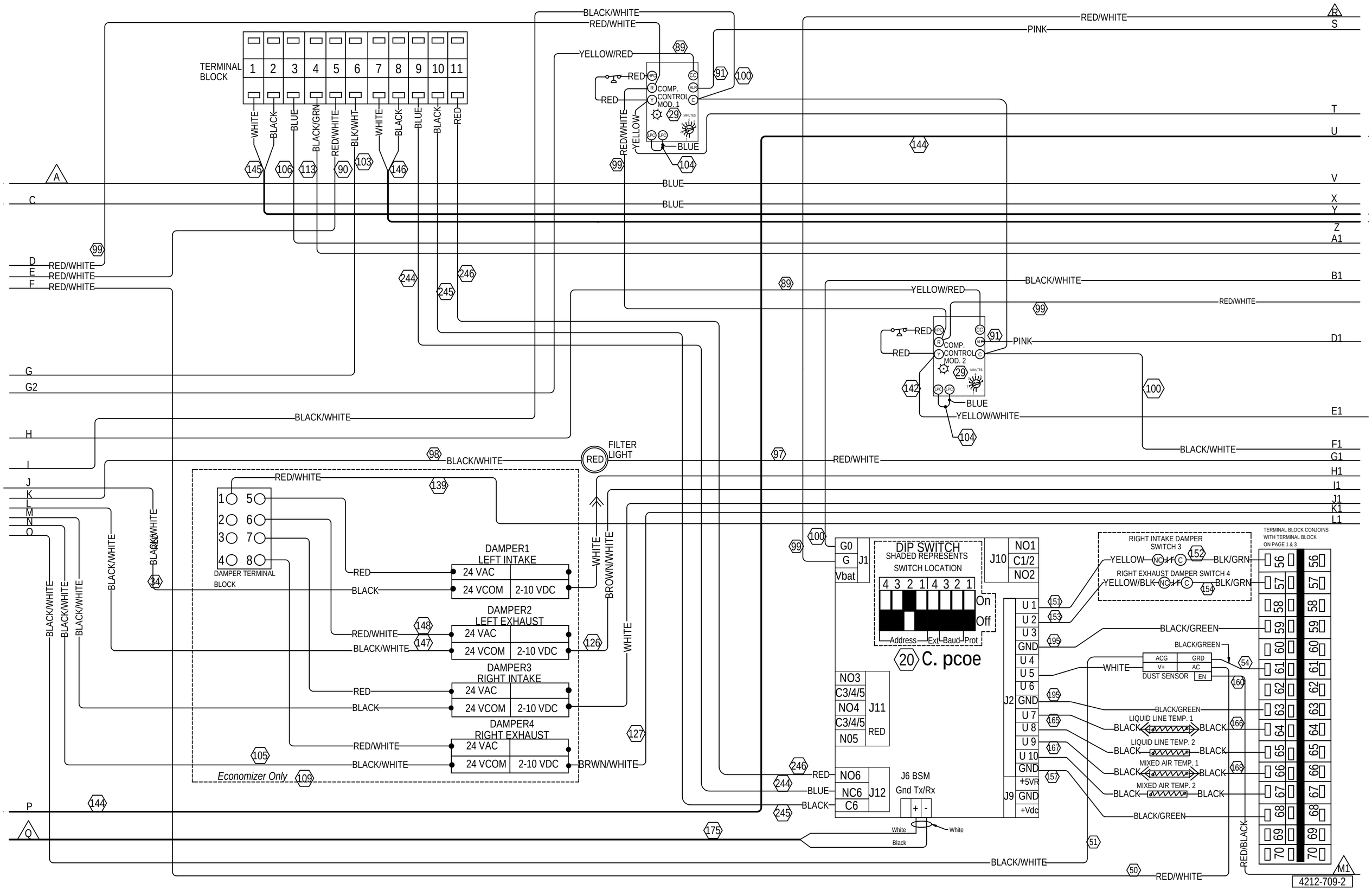
TERMINAL BLOCK
1 2 3 4 5 6 7 8 9 10 11
WHITE
BLACK
BLUE
BLACK/GRN
RED/WHITE
BLK/WHT
WHITE
BLACK
BLUE
BLACK
RED
COMP. CONTROL MOD. 1
COMP. CONTROL MOD. 2
MINUTES
YELLOW/RED
BLACK/WHITE
RED/WHITE
PINK
YELLOW/WHITE
FILTER LIGHT
DAMPER TERMINAL BLOCK
DAMPER1 LEFT INTAKE
DAMPER2 LEFT EXHAUST
DAMPER3 RIGHT INTAKE
DAMPER4 RIGHT EXHAUST
24 VAC
24 VCOM
2-10 VDC
Economizer Only
BROWN/WHITE
BRWN/WHITE
DIP SWITCH
SHADED REPRESENTS SWITCH LOCATION
Address Ext Baud Prot
On
Off
C. pcoe
J1
J2
J9
J10
J11
J12
J6 BSM
Gnd Tx/Rx
White
Black
RIGHT INTAKE DAMPER SWITCH 3
RIGHT EXHAUST DAMPER SWITCH 4
YELLOW
YELLOW/BLK
BLK/GRN
BLACK/GREEN
DUST SENSOR
LIQUID LINE TEMP. 1
LIQUID LINE TEMP. 2
MIXED AIR TEMP. 1
MIXED AIR TEMP. 2
TERMINAL BLOCK CONJOINS WITH TERMINAL BLOCK ON PAGE 1 & 3
RED/BLACK
M1
4212-709-2

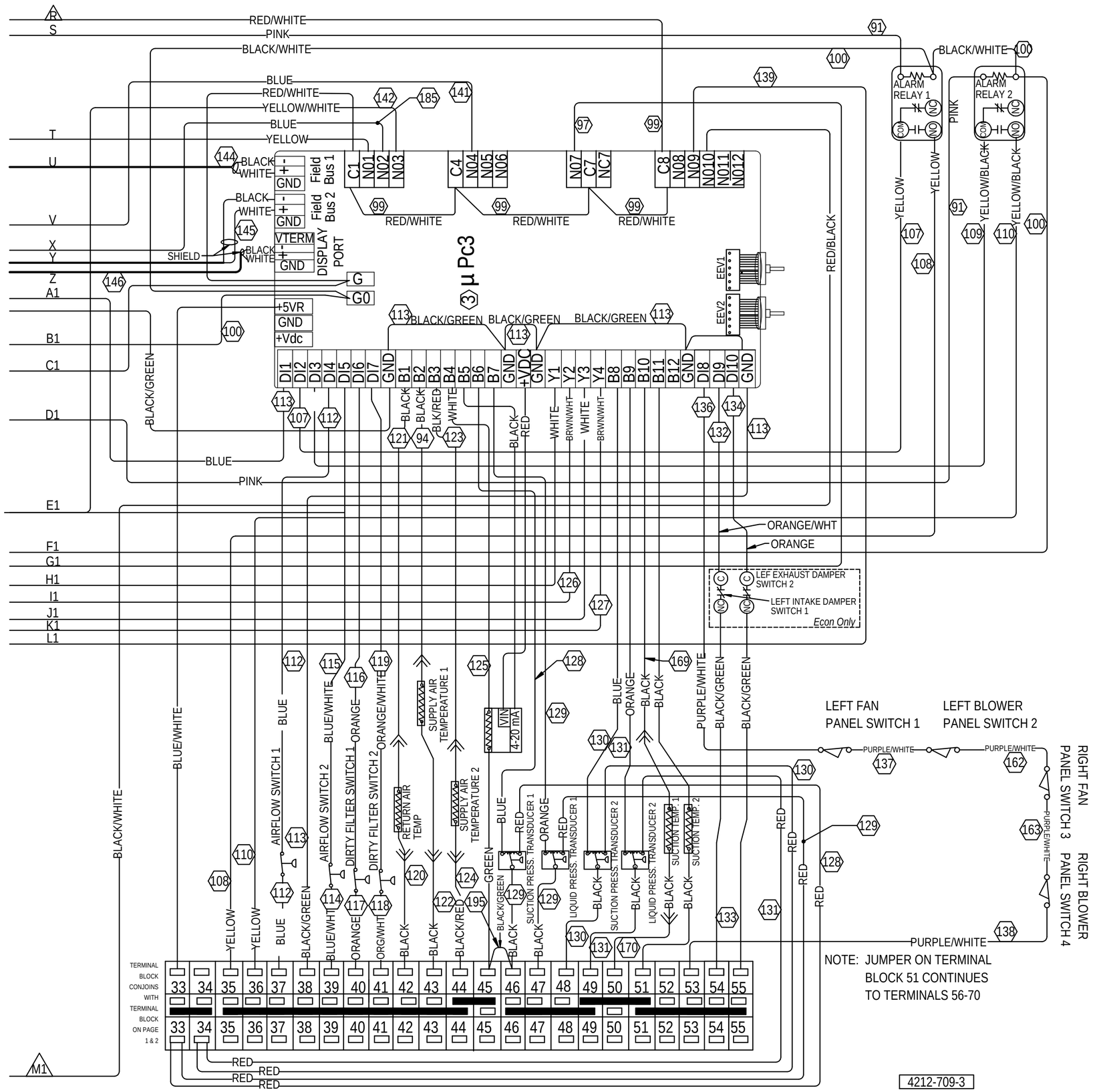

NOTE: JUMPER ON TERMINAL BLOCK 51 CONTINUES TO TERMINALS 56-70

4212-709-3