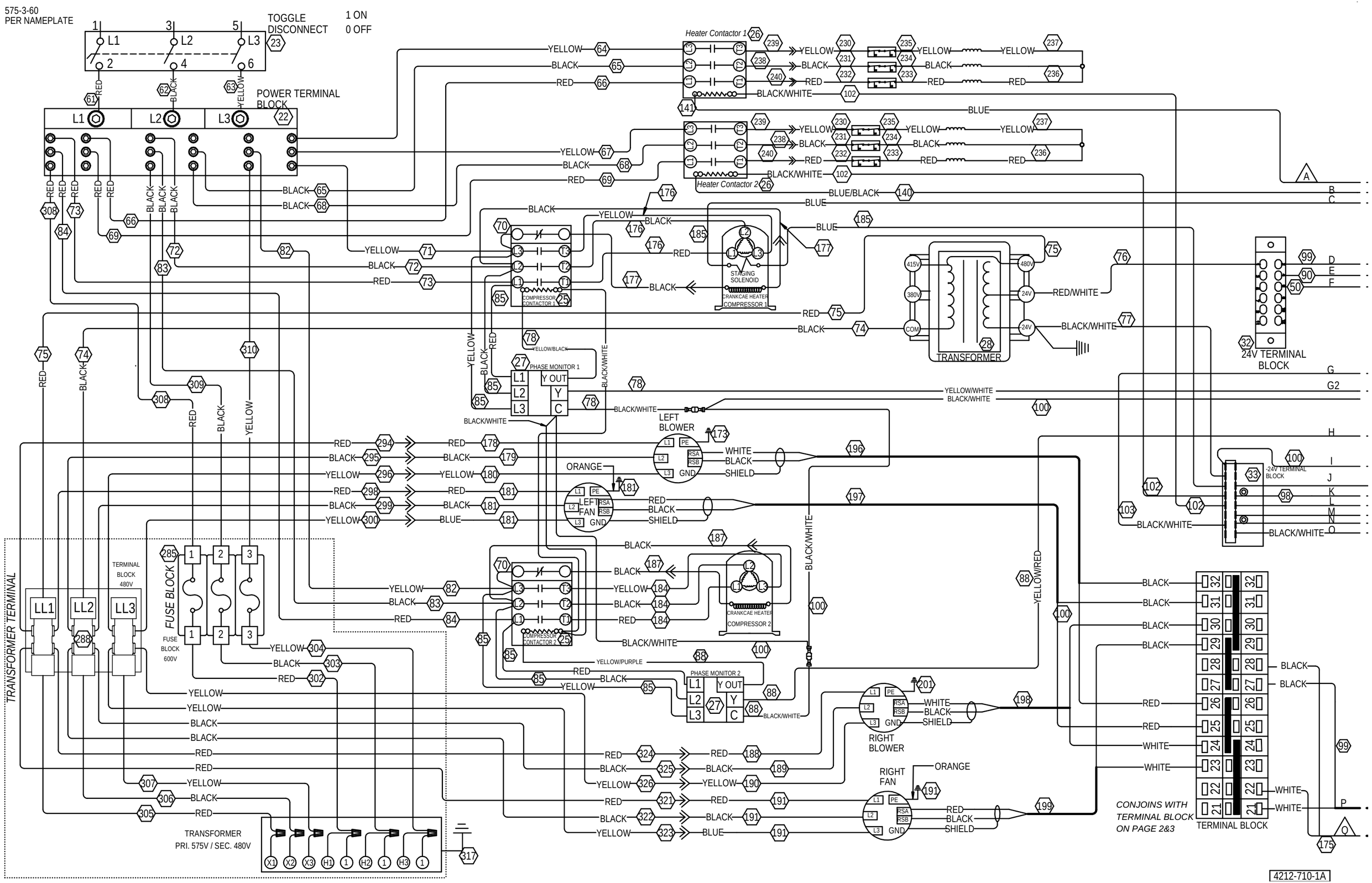
575-3-60
PER NAMEPLATE
TOGGLE DISCONNECT
1 ON
0 OFF
POWER TERMINAL BLOCK
Heater Contactor 1
Heater Contactor 2
COMPRESSOR CONTACTOR 1
COMPRESSOR CONTACTOR 2
STAGING SOLENOID
CRANKCAE HEATER
COMPRESSOR 1
COMPRESSOR 2
PHASE MONITOR 1
PHASE MONITOR 2
TRANSFORMER
24V TERMINAL BLOCK
-24V TERMINAL BLOCK
LEFT BLOWER
LEFT FAN
RIGHT BLOWER
RIGHT FAN
TRANSFORMER TERMINAL
TERMINAL BLOCK 480V
FUSE BLOCK
FUSE BLOCK 600V
TRANSFORMER
PRI. 575V / SEC. 480V
TERMINAL BLOCK
CONJOINS WITH TERMINAL BLOCK ON PAGE 2&3
4212-710-1A

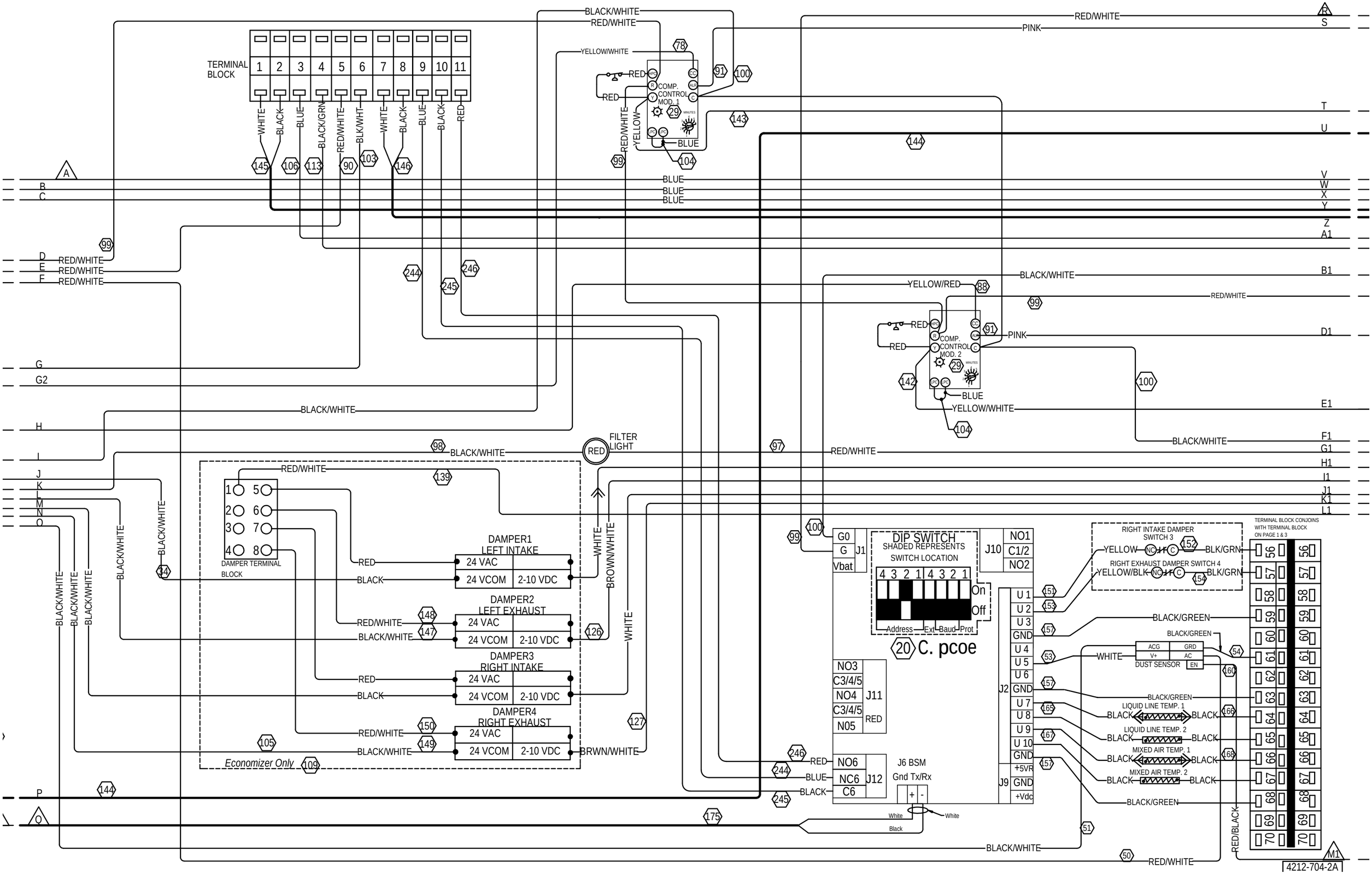
TERMINAL BLOCK
1 2 3 4 5 6 7 8 9 10 11
WHITE
BLACK
BLUE
BLACK/GRN
RED/WHITE
BLK/WHT
WHITE
BLACK
BLUE
BLACK
RED
BLACK/WHITE
RED/WHITE
YELLOW/WHITE
RED
COMP. CONTROL MOD. 1
RED/WHITE
YELLOW
BLUE
BLUE
BLUE
BLUE
RED/WHITE
PINK
RED/WHITE
YELLOW/RED
BLACK/WHITE
RED/WHITE
RED
COMP. CONTROL MOD. 2
PINK
BLUE
YELLOW/WHITE
BLACK/WHITE
FILTER LIGHT
RED
BLACK/WHITE
RED/WHITE
RED/WHITE
DAMPER TERMINAL BLOCK
DAMPER1 LEFT INTAKE
24 VAC
24 VCOM
2-10 VDC
DAMPER2 LEFT EXHAUST
DAMPER3 RIGHT INTAKE
DAMPER4 RIGHT EXHAUST
RED
BLACK
RED/WHITE
BLACK/WHITE
WHITE
BROWN/WHITE
BRWN/WHITE
Economizer Only
DIP SWITCH
SHADED REPRESENTS SWITCH LOCATION
4 3 2 1 4 3 2 1
On
Off
Address Ext Baud Prot
C. pcoe
G0
G
Vbat
J1
NO3
C3/4/5
NO4
C3/4/5
N05
J11
RED
NO6
NC6
C6
J12
J6 BSM
Gnd Tx/Rx
White
Black
J10
NO1
C1/2
NO2
U 1
U 2
U 3
GND
U 4
U 5
U 6
GND
U 7
U 8
U 9
U 10
GND
J2
+5VR
GND
+Vdc
J9
RIGHT INTAKE DAMPER SWITCH 3
YELLOW
BLK/GRN
RIGHT EXHAUST DAMPER SWITCH 4
YELLOW/BLK
BLK/GRN
BLACK/GREEN
WHITE
ACG
GRD
V+
AC
DUST SENSOR
EN
LIQUID LINE TEMP. 1
LIQUID LINE TEMP. 2
MIXED AIR TEMP. 1
MIXED AIR TEMP. 2
TERMINAL BLOCK CONJOINS WITH TERMINAL BLOCK ON PAGE 1 & 3
RED/BLACK
M1
4212-704-2A

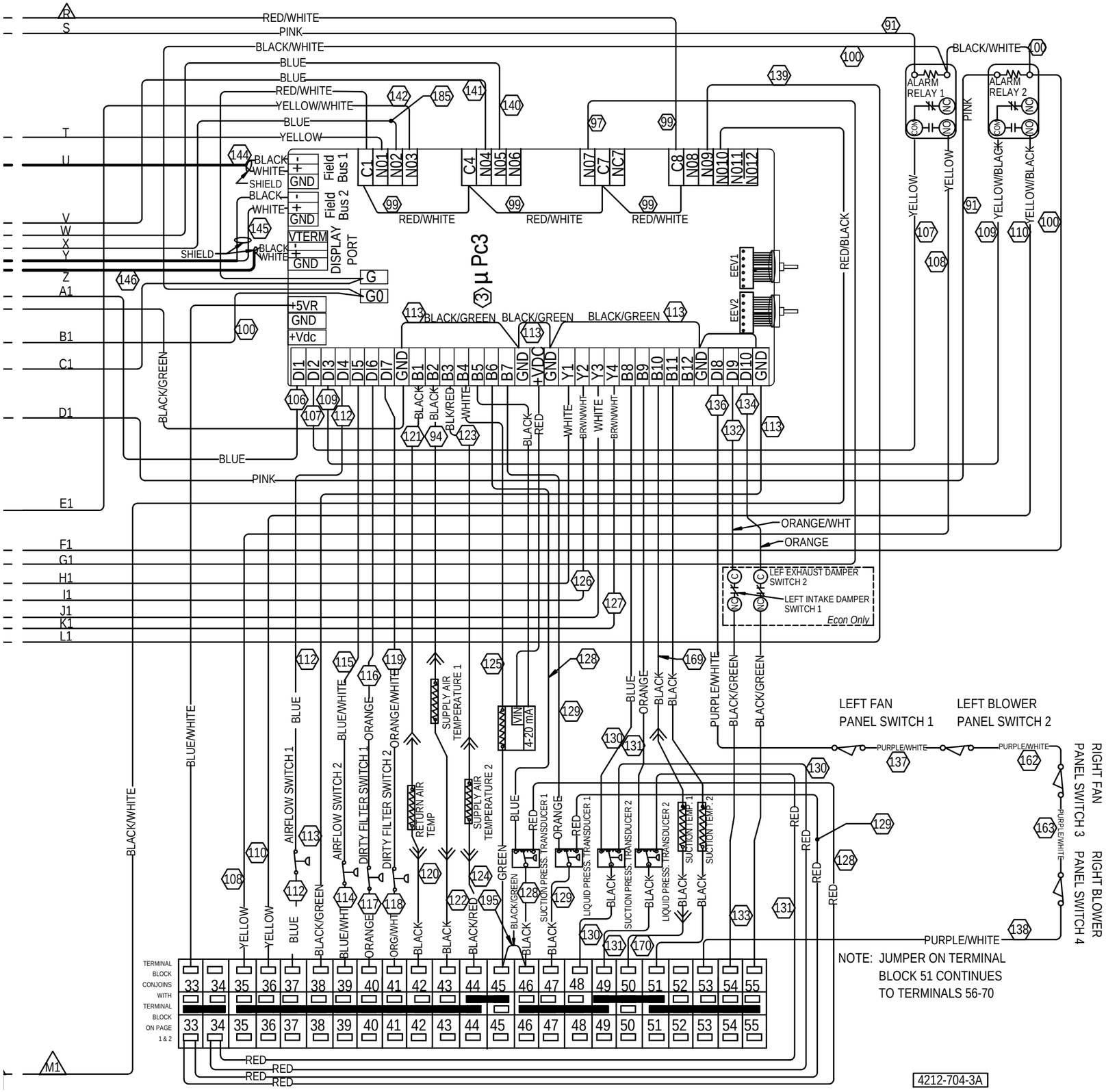
µ Pc3
Field Bus 1
Field Bus 2
DISPLAY PORT
ALARM RELAY 1
ALARM RELAY 2
LEF EXHAUST DAMPER SWITCH 2
LEFT INTAKE DAMPER SWITCH 1
Econ Only
AIRFLOW SWITCH 1
AIRFLOW SWITCH 2
DIRTY FILTER SWITCH 1
DIRTY FILTER SWITCH 2
RETURN AIR TEMP
SUPPLY AIR TEMPERATURE 1
SUPPLY AIR TEMPERATURE 2
SUCTION PRESS. TRANSDUCER 1
LIQUID PRESS. TRANSDUCER 1
SUCTION PRESS. TRANSDUCER 2
LIQUID PRESS. TRANSDUCER 2
SUCTION TEMP. 1
SUCTION TEMP. 2
LEFT FAN PANEL SWITCH 1
LEFT BLOWER PANEL SWITCH 2
RIGHT FAN PANEL SWITCH 3
RIGHT BLOWER PANEL SWITCH 4
TERMINAL BLOCK CONJOINS WITH TERMINAL BLOCK ON PAGE 1 & 2
NOTE: JUMPER ON TERMINAL BLOCK 51 CONTINUES TO TERMINALS 56-70
4212-704-3A