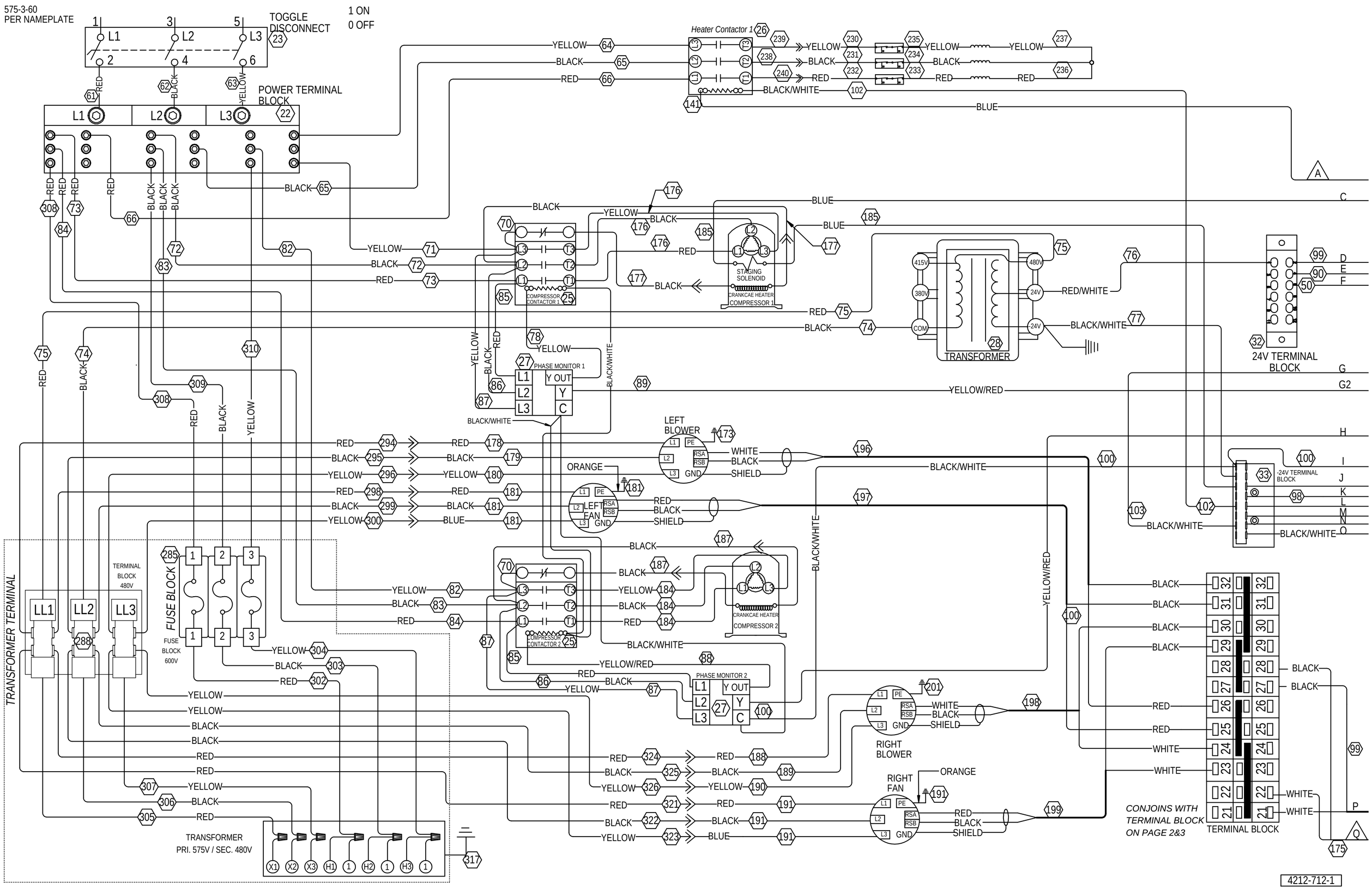
575-3-60
PER NAMEPLATE
TOGGLE DISCONNECT
1 ON
0 OFF
POWER TERMINAL BLOCK
Heater Contactor 1
COMPRESSOR CONTACTOR 1
STAGING SOLENOID
CRANKCAE HEATER
COMPRESSOR 1
TRANSFORMER
24V TERMINAL BLOCK
PHASE MONITOR 1
LEFT BLOWER
LEFT FAN
-24V TERMINAL BLOCK
COMPRESSOR CONTACTOR 2
CRANKCAE HEATER
COMPRESSOR 2
PHASE MONITOR 2
RIGHT BLOWER
RIGHT FAN
TRANSFORMER PRI. 575V / SEC. 480V
TRANSFORMER TERMINAL
TERMINAL BLOCK 480V
FUSE BLOCK
FUSE BLOCK 600V
CONJOINS WITH TERMINAL BLOCK ON PAGE 2&3
TERMINAL BLOCK
4212-712-1

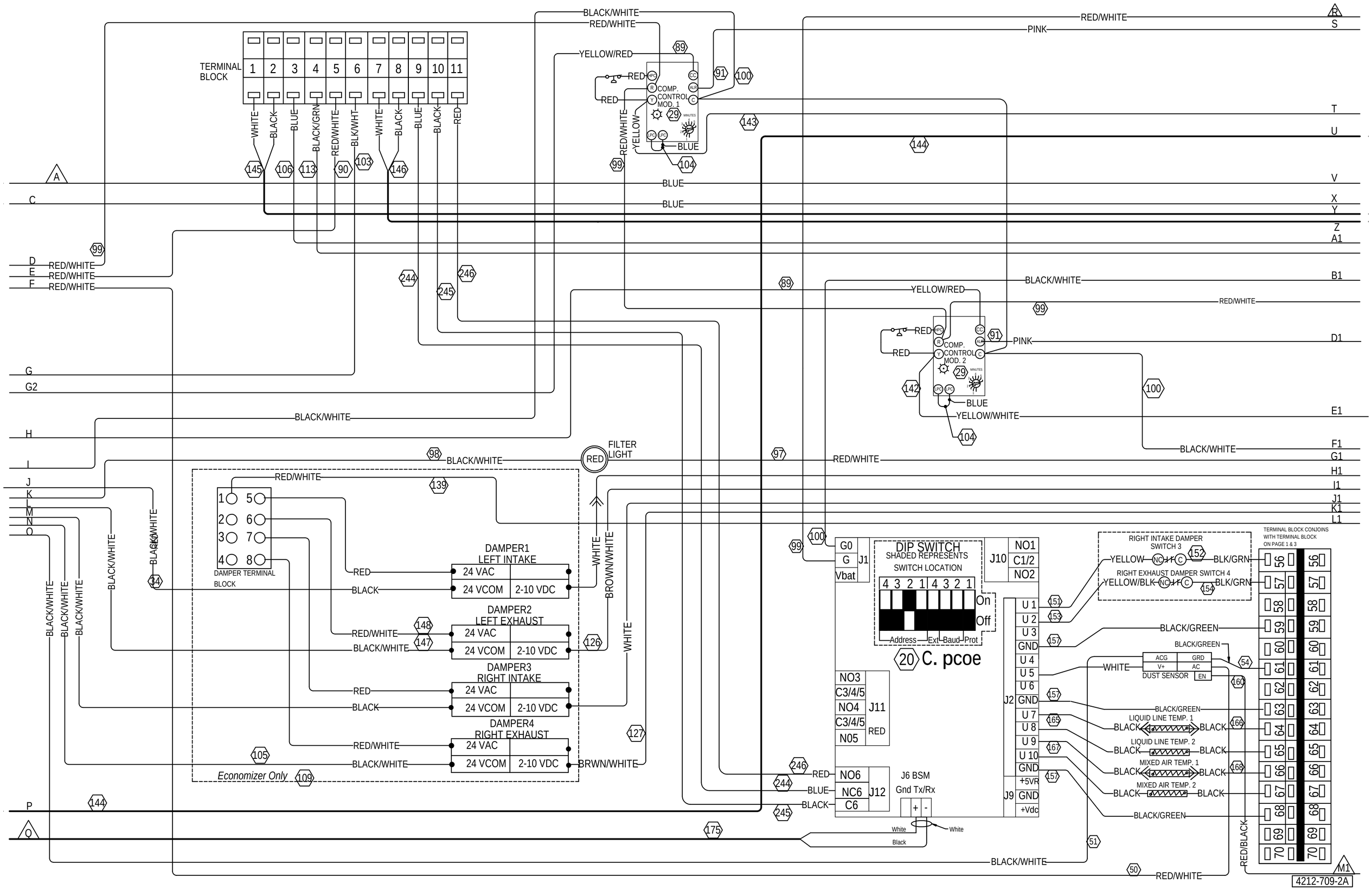
TERMINAL BLOCK
1 2 3 4 5 6 7 8 9 10 11
WHITE
BLACK
BLUE
BLACK/GRN
RED/WHITE
BLK/WHT
WHITE
BLACK
BLUE
BLACK
RED
BLACK/WHITE
RED/WHITE
YELLOW/RED
RED
COMP. CONTROL MOD. 1
RED/WHITE
YELLOW
BLUE
RED/WHITE
PINK
BLUE
BLUE
BLACK/WHITE
YELLOW/RED
RED
COMP. CONTROL MOD. 2
PINK
BLUE
YELLOW/WHITE
BLACK/WHITE
RED/WHITE
FILTER LIGHT
RED
BLACK/WHITE
RED/WHITE
DAMPER TERMINAL BLOCK
DAMPER1 LEFT INTAKE
24 VAC
24 VCOM
2-10 VDC
DAMPER2 LEFT EXHAUST
DAMPER3 RIGHT INTAKE
DAMPER4 RIGHT EXHAUST
Economizer Only
WHITE
BROWN/WHITE
BRWN/WHITE
G0
G
Vbat
J1
DIP SWITCH
SHADED REPRESENTS SWITCH LOCATION
4 3 2 1 4 3 2 1
On
Off
Address Ext Baud Prot
20 C. pcoe
J10
NO1
C1/2
NO2
NO3
C3/4/5
NO4
C3/4/5
N05
J11
RED
NO6
NC6
C6
J12
J6 BSM
Gnd Tx/Rx
+ -
White
Black
U 1
U 2
U 3
GND
U 4
U 5
U 6
J2
GND
U 7
U 8
U 9
U 10
GND
+5VR
J9
GND
+Vdc
RIGHT INTAKE DAMPER SWITCH 3
YELLOW
NC
C
BLK/GRN
RIGHT EXHAUST DAMPER SWITCH 4
YELLOW/BLK
BLK/GRN
BLACK/GREEN
WHITE
ACG
GRD
V+
AC
DUST SENSOR
EN
LIQUID LINE TEMP. 1
LIQUID LINE TEMP. 2
MIXED AIR TEMP. 1
MIXED AIR TEMP. 2
TERMINAL BLOCK CONJOINS WITH TERMINAL BLOCK ON PAGE 1 & 3
RED/BLACK
M1
4212-709-2A

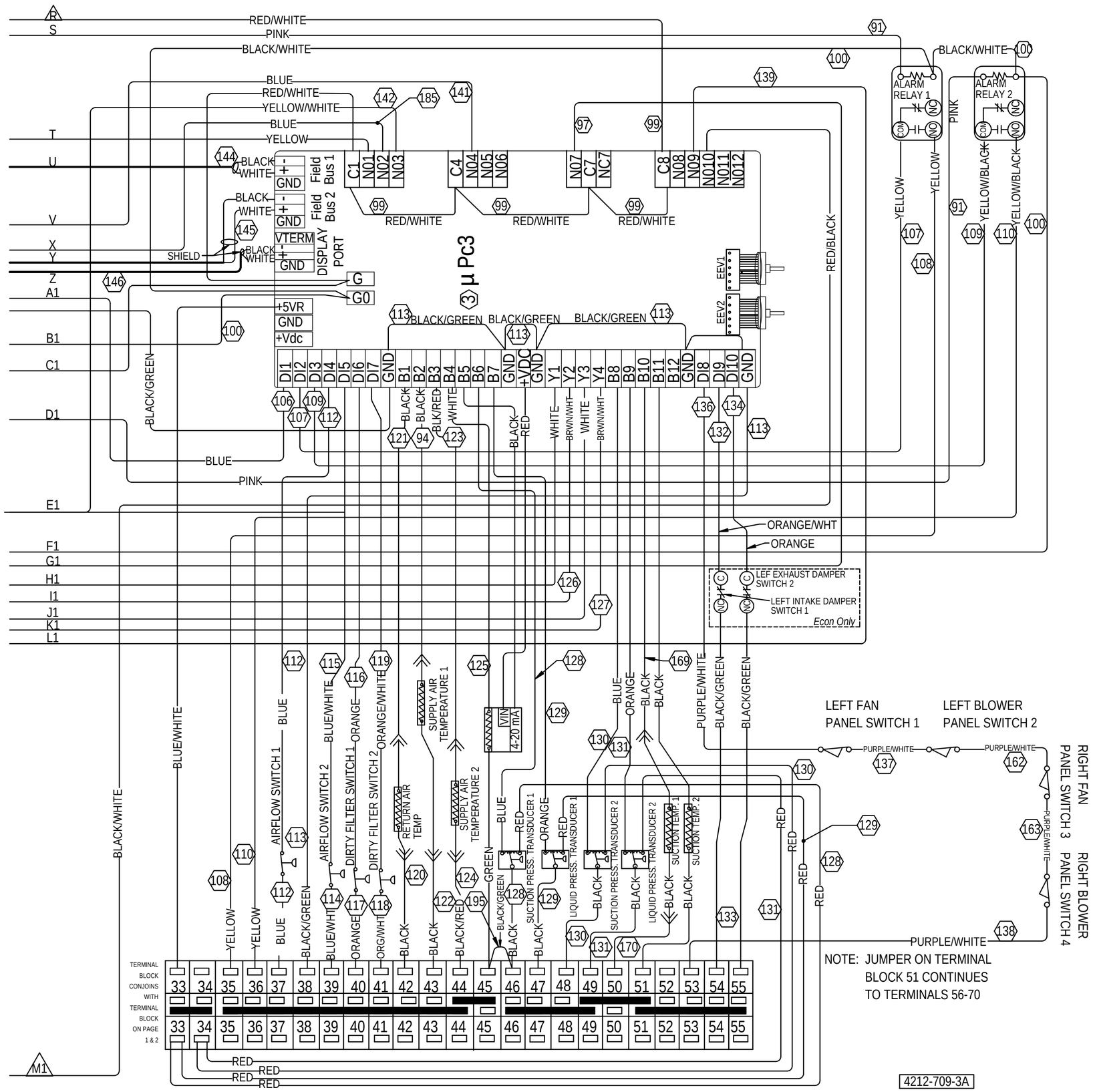
R
S
T
U
V
X
Y
Z
A1
B1
C1
D1
E1
F1
G1
H1
I1
J1
K1
L1
M1
RED/WHITE
PINK
BLACK/WHITE
BLUE
YELLOW/WHITE
YELLOW
Field Bus 1
Field Bus 2
DISPLAY PORT
VTERM
SHIELD
μ Pc3
EEV1
EEV2
+5VR
GND
+Vdc
BLACK/GREEN
RED/BLACK
ALARM RELAY 1
ALARM RELAY 2
YELLOW/BLACK
LEF EXHAUST DAMPER SWITCH 2
LEFT INTAKE DAMPER SWITCH 1
Econ Only
ORANGE/WHT
ORANGE
AIRFLOW SWITCH 1
AIRFLOW SWITCH 2
DIRTY FILTER SWITCH 1
DIRTY FILTER SWITCH 2
RETURN AIR TEMP
SUPPLY AIR TEMPERATURE 1
SUPPLY AIR TEMPERATURE 2
4-20 mA
LIQUID PRESS. TRANSDUCER 1
SUCTION PRESS. TRANSDUCER 1
SUCTION PRESS. TRANSDUCER 2
LIQUID PRESS. TRANSDUCER 2
SUCTION TEMP. 1
SUCTION TEMP. 2
PURPLE/WHITE
LEFT FAN PANEL SWITCH 1
LEFT BLOWER PANEL SWITCH 2
RIGHT FAN PANEL SWITCH 3
RIGHT BLOWER PANEL SWITCH 4
TERMINAL BLOCK CONJOINS WITH TERMINAL BLOCK ON PAGE 1 & 2
NOTE: JUMPER ON TERMINAL BLOCK 51 CONTINUES TO TERMINALS 56-70
4212-709-3A