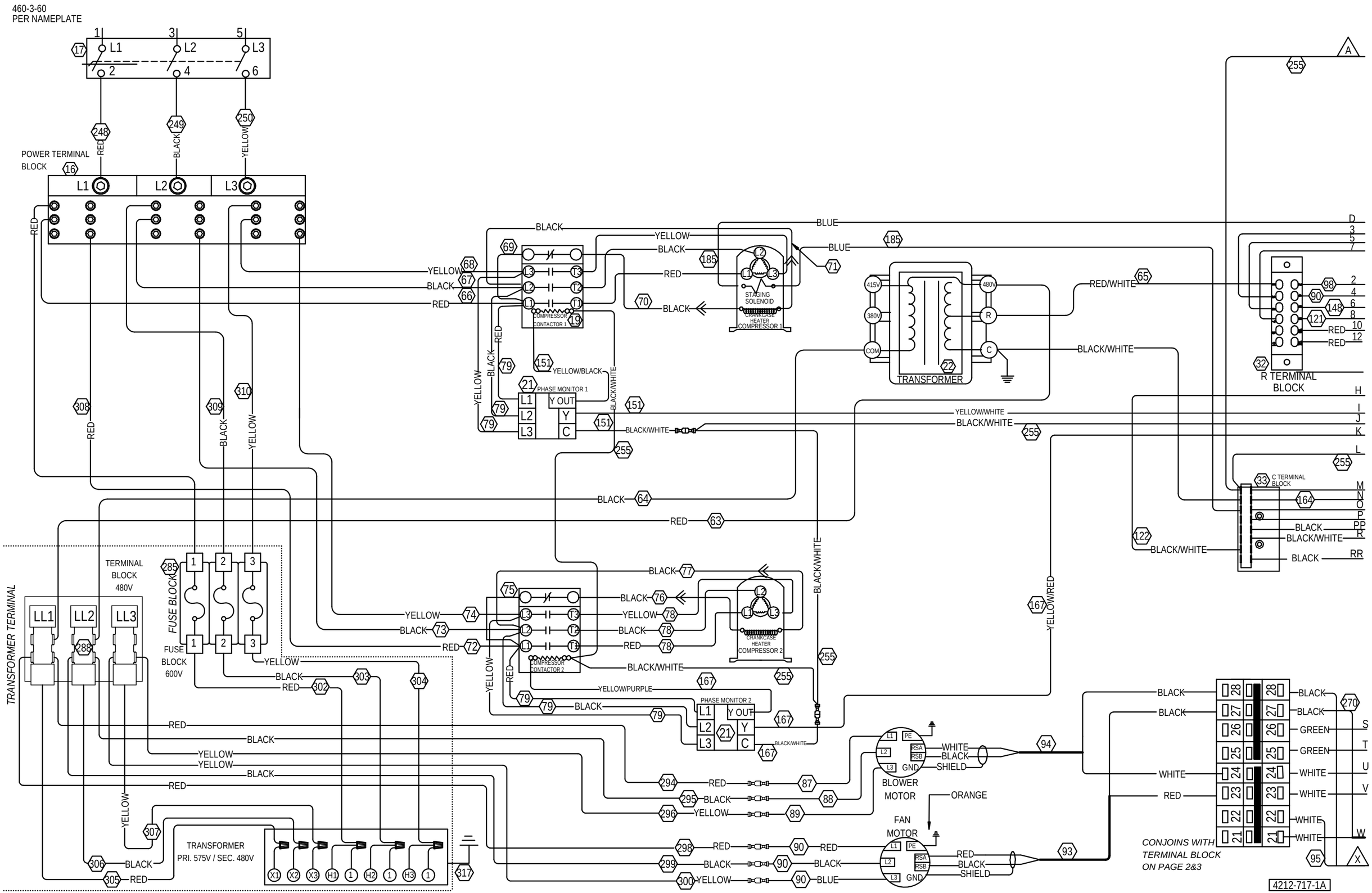
460-3-60
PER NAMEPLATE
POWER TERMINAL BLOCK
COMPRESSOR CONTACTOR 1
STAGING SOLENOID
CRANKCASE HEATER COMPRESSOR 1
TRANSFORMER
R TERMINAL BLOCK
PHASE MONITOR 1
C TERMINAL BLOCK
COMPRESSOR CONTACTOR 2
CRANKCASE HEATER COMPRESSOR 2
PHASE MONITOR 2
TRANSFORMER TERMINAL
TERMINAL BLOCK 480V
FUSE BLOCK
FUSE BLOCK 600V
TRANSFORMER PRI. 575V / SEC. 480V
BLOWER MOTOR
FAN MOTOR
CONJOINS WITH TERMINAL BLOCK ON PAGE 2&3
4212-717-1A

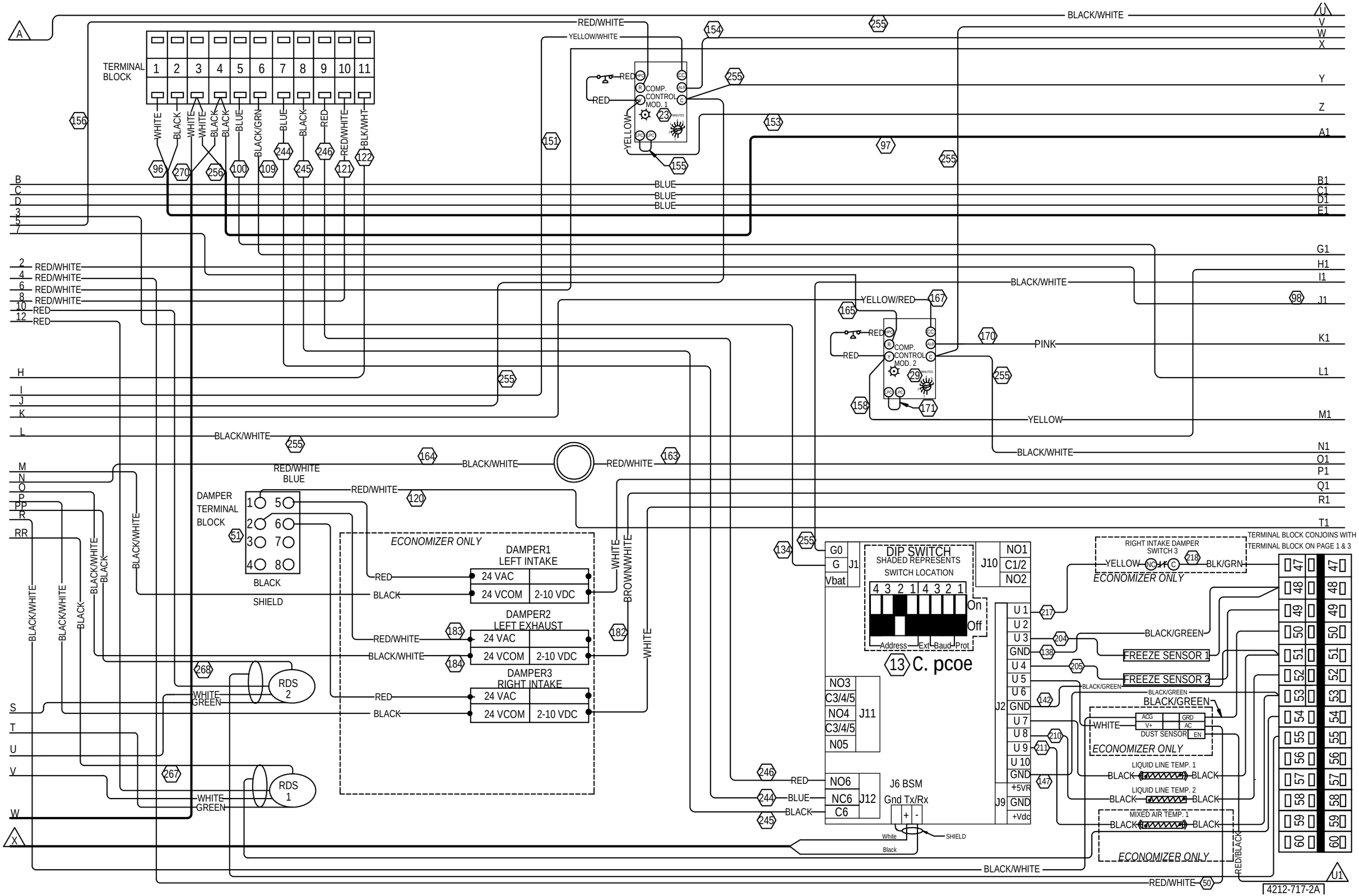
TERMINAL BLOCK
1 2 3 4 5 6 7 8 9 10 11
WHITE
BLACK
WHITE
WHITE
BLACK
BLACK
BLUE
BLACK/GRN
BLUE
BLACK
RED
RED/WHITE
BLK/WHT
COMP. CONTROL MOD. 1
COMP. CONTROL MOD. 2
YELLOW
YELLOW/RED
RED/WHITE
YELLOW/WHITE
BLACK/WHITE
BLUE
PINK
YELLOW
DAMPER TERMINAL BLOCK
BLACK
SHIELD
ECONOMIZER ONLY
DAMPER1 LEFT INTAKE
DAMPER2 LEFT EXHAUST
DAMPER3 RIGHT INTAKE
24 VAC
24 VCOM
2-10 VDC
RDS 2
RDS 1
WHITE
GREEN
BROWN/WHITE
DIP SWITCH
SHADED REPRESENTS SWITCH LOCATION
Address Ext Baud Prot
On
Off
13 C. pcoe
J1
J10
J11
J12
J2
J9
J6 BSM
Gnd Tx/Rx
SHIELD
RIGHT INTAKE DAMPER SWITCH 3
BLK/GRN
FREEZE SENSOR 1
FREEZE SENSOR 2
BLACK/GREEN
DUST SENSOR
LIQUID LINE TEMP. 1
LIQUID LINE TEMP. 2
MIXED AIR TEMP. 1
TERMINAL BLOCK CONJOINS WITH TERMINAL BLOCK ON PAGE 1 & 3
RED/BLACK
4212-717-2A

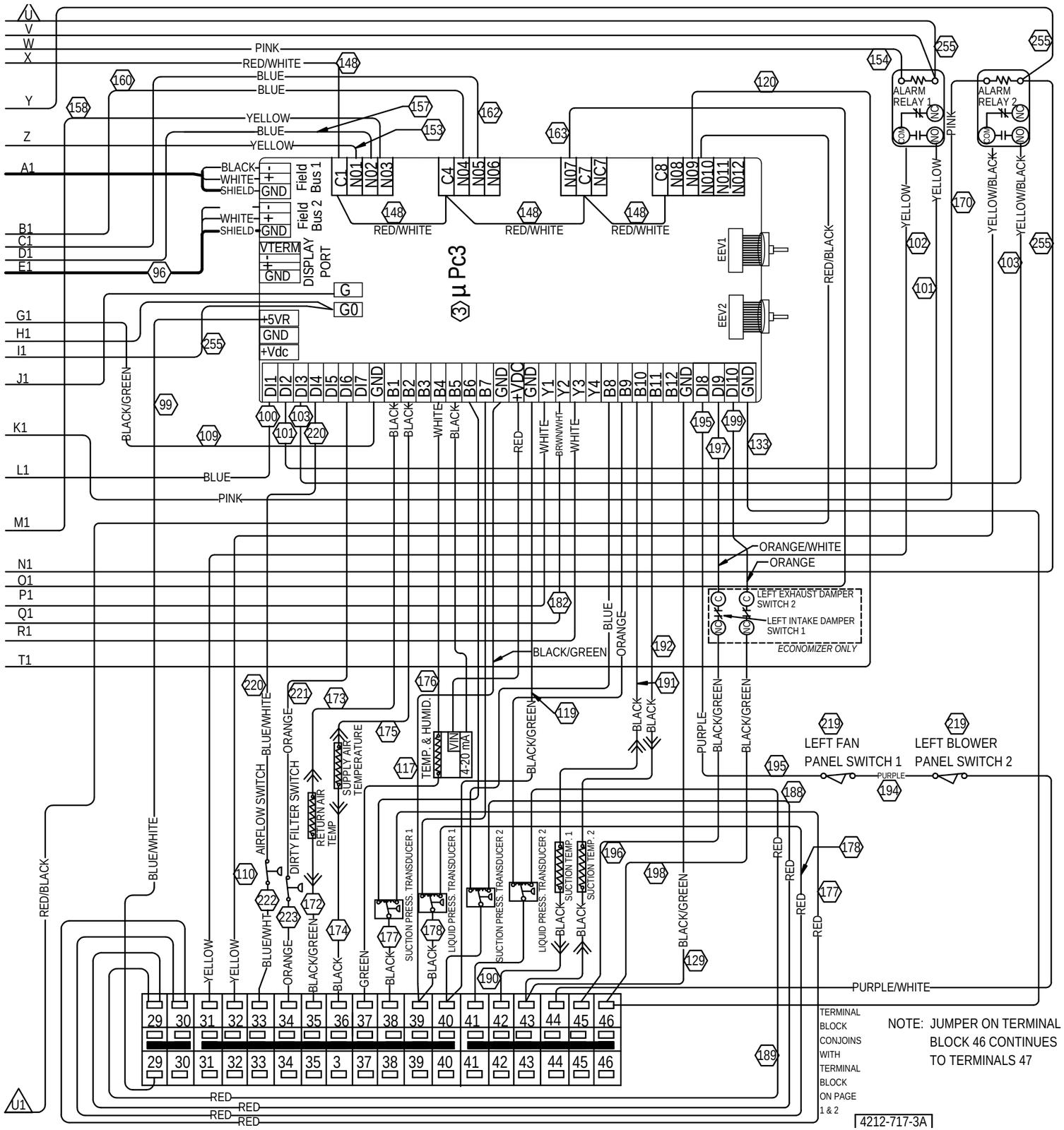
U
V
W
X
Y
Z
A1
B1
C1
D1
E1
G1
H1
I1
J1
K1
L1
M1
N1
O1
P1
Q1
R1
T1
PINK
RED/WHITE
BLUE
YELLOW
BLACK
WHITE
SHIELD
GND
Field Bus 1
Field Bus 2
VTERM
DISPLAY PORT
G
G0
+5VR
+Vdc
C1 NO1 NO2 NO3
C4 NO4 NO5 NO6
NO7 C7 NC7
C8 NO8 NO9 NO10 NO11 NO12
DI1 DI2 DI3 DI4 DI5 DI6 DI7 GND B1 B2 B3 B4 B5 B6 B7 GND +VDC GND Y1 Y2 Y3 Y4 B8 B9 B10 B11 B12 GND DI8 DI9 DI10 GND
µPc3
EEV1
EEV2
ALARM RELAY 1
ALARM RELAY 2
COM
NO
YELLOW/BLACK
RED/BLACK
BLACK/GREEN
ORANGE/WHITE
ORANGE
LEFT EXHAUST DAMPER SWITCH 2
LEFT INTAKE DAMPER SWITCH 1
ECONOMIZER ONLY
LEFT FAN PANEL SWITCH 1
LEFT BLOWER PANEL SWITCH 2
PURPLE
PURPLE/WHITE
BLUE/WHITE
AIRFLOW SWITCH
DIRTY FILTER SWITCH
RETURN AIR TEMP
SUPPLY AIR TEMPERATURE
TEMP. & HUMID.
VIN
4-20 mA
SUCTION PRESS. TRANSDUCER 1
LIQUID PRESS. TRANSDUCER 1
SUCTION PRESS. TRANSDUCER 2
LIQUID PRESS. TRANSDUCER 2
SUCTION TEMP. 1
SUCTION TEMP. 2
GREEN
29 30 31 32 33 34 35 36 37 38 39 40 41 42 43 44 45 46
29 30 31 32 33 34 35 3 37 38 39 40 41 42 43 44 45 46
U1
TERMINAL BLOCK CONJOINS WITH TERMINAL BLOCK ON PAGE 1 & 2
NOTE: JUMPER ON TERMINAL BLOCK 46 CONTINUES TO TERMINALS 47
4212-717-3A