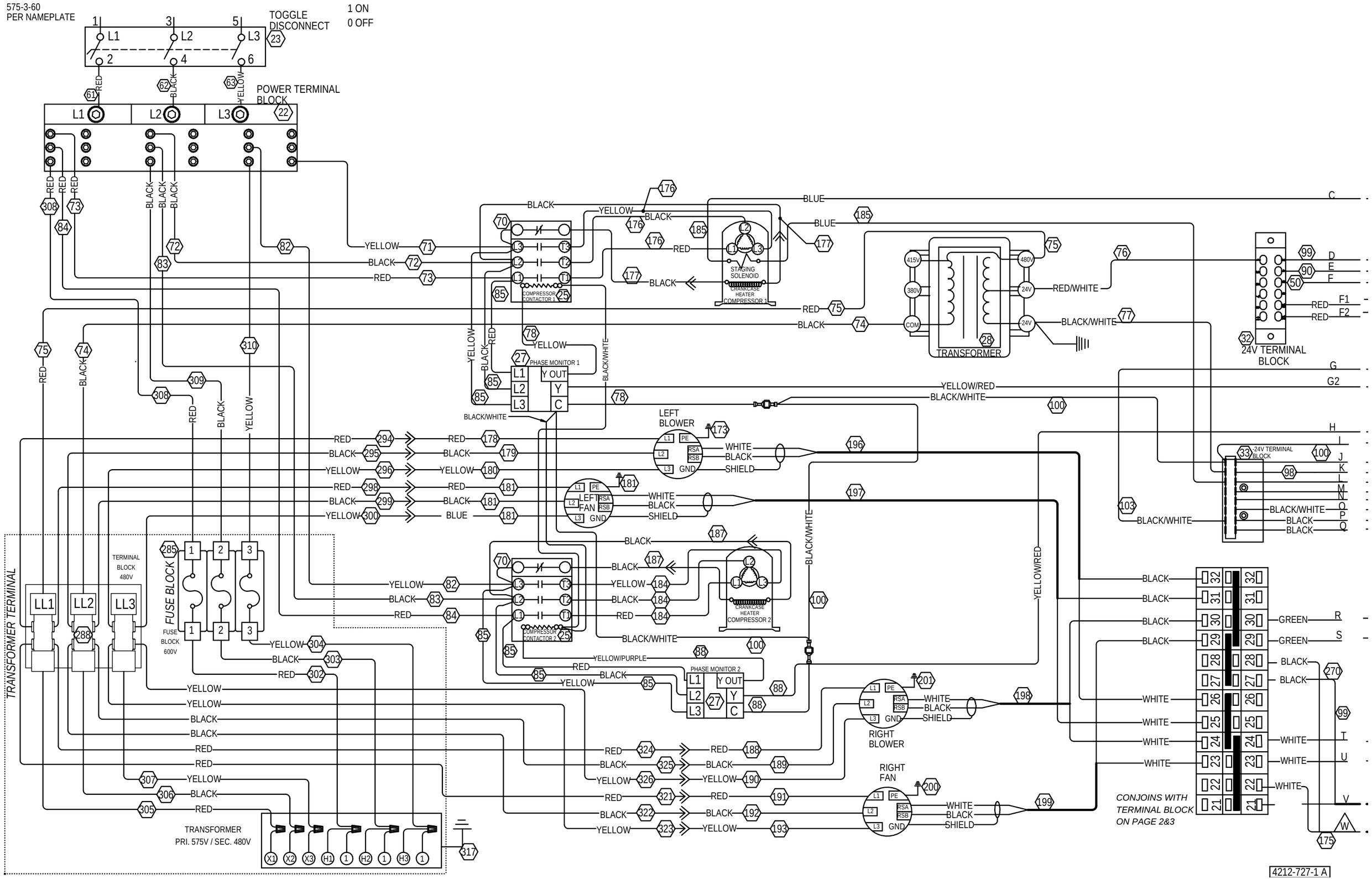
575-3-60
PER NAMEPLATE
TOGGLE DISCONNECT
1 ON
0 OFF
POWER TERMINAL BLOCK
COMPRESSOR CONTACTOR 1
STAGING SOLENOID
CRANKCASE HEATER
COMPRESSOR 1
TRANSFORMER
24V TERMINAL BLOCK
PHASE MONITOR 1
LEFT BLOWER
LEFT FAN
COMPRESSOR CONTACTOR 2
CRANKCASE HEATER
COMPRESSOR 2
PHASE MONITOR 2
RIGHT BLOWER
RIGHT FAN
TRANSFORMER TERMINAL
TERMINAL BLOCK 480V
FUSE BLOCK
FUSE BLOCK 600V
TRANSFORMER
PRI. 575V / SEC. 480V
CONJOINS WITH TERMINAL BLOCK ON PAGE 2&3
4212-727-1 A

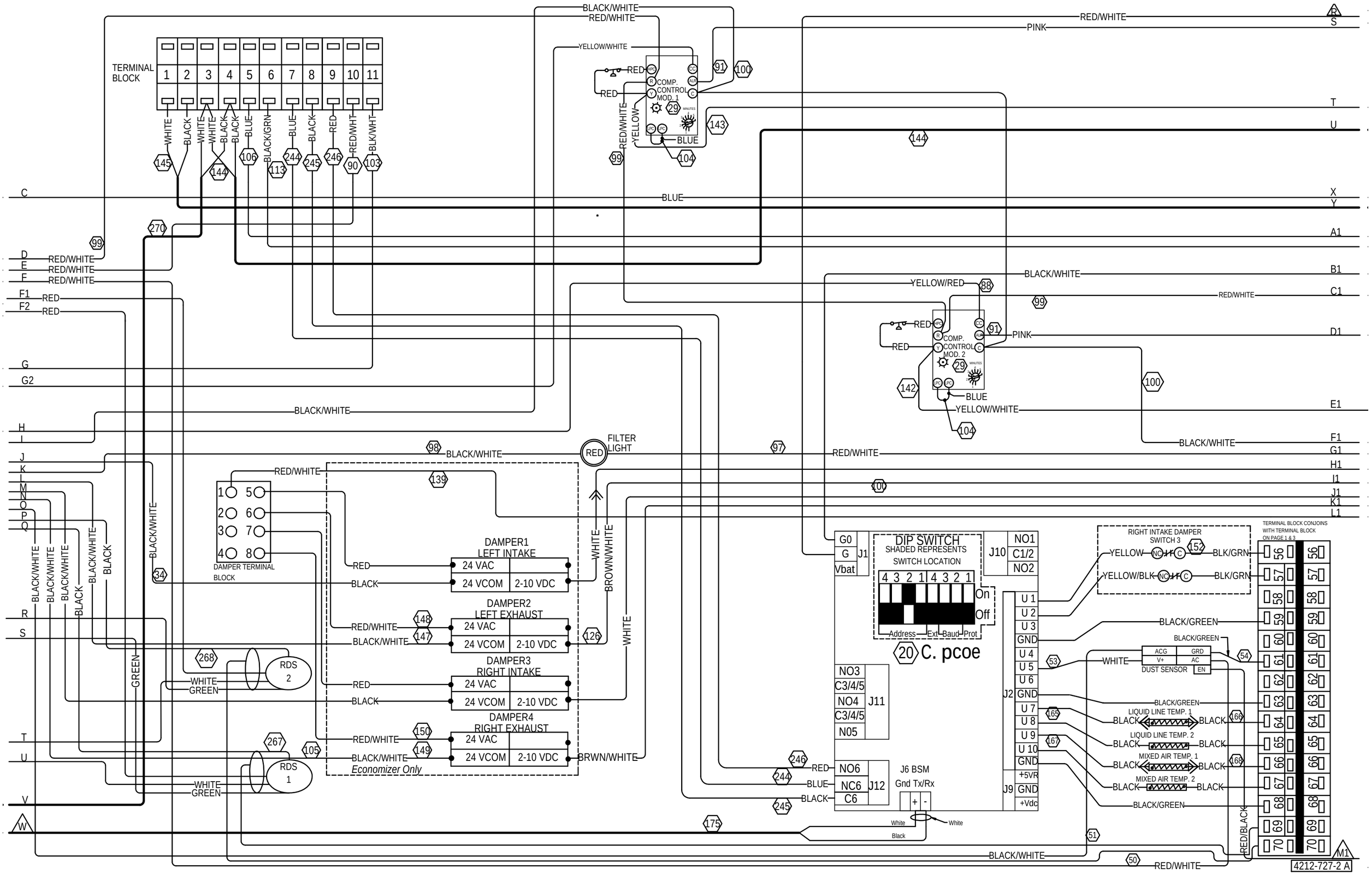

TERMINAL BLOCK
1 2 3 4 5 6 7 8 9 10 11
WHITE BLACK WHITE WHITE BLACK BLACK BLUE BLACK/GRN BLUE BLACK RED RED/WHT BLK/WHT
BLACK/WHITE
RED/WHITE
YELLOW/WHITE
COMP. CONTROL MOD. 1
RED
RED/WHITE
YELLOW
BLUE
PINK
COMP. CONTROL MOD. 2
YELLOW/RED
YELLOW/WHITE
FILTER LIGHT
DAMPER TERMINAL BLOCK
DAMPER1 LEFT INTAKE
DAMPER2 LEFT EXHAUST
DAMPER3 RIGHT INTAKE
DAMPER4 RIGHT EXHAUST
24 VAC
24 VCOM
2-10 VDC
Economizer Only
RDS 2
RDS 1
WHITE
GREEN
BROWN/WHITE
BRWN/WHITE
DIP SWITCH
SHADED REPRESENTS SWITCH LOCATION
On
Off
Address Ext Baud Prot
20 C. pcoe
G0 G Vbat J1
J10 NO1 C1/2 NO2
NO3 C3/4/5 NO4 C3/4/5 N05 J11
NO6 NC6 C6 J12
J6 BSM Gnd Tx/Rx
J2 U 1 U 2 U 3 GND U 4 U 5 U 6 GND U 7 U 8 U 9 U 10 GND
J9 +5VR GND +Vdc
RIGHT INTAKE DAMPER SWITCH 3
YELLOW BLK/GRN
YELLOW/BLK BLK/GRN
DUST SENSOR
ACG GRD V+ AC EN
LIQUID LINE TEMP. 1
LIQUID LINE TEMP. 2
MIXED AIR TEMP. 1
MIXED AIR TEMP. 2
BLACK/GREEN
TERMINAL BLOCK CONJOINS WITH TERMINAL BLOCK ON PAGE 1 & 3
RED/BLACK
4212-727-2 A

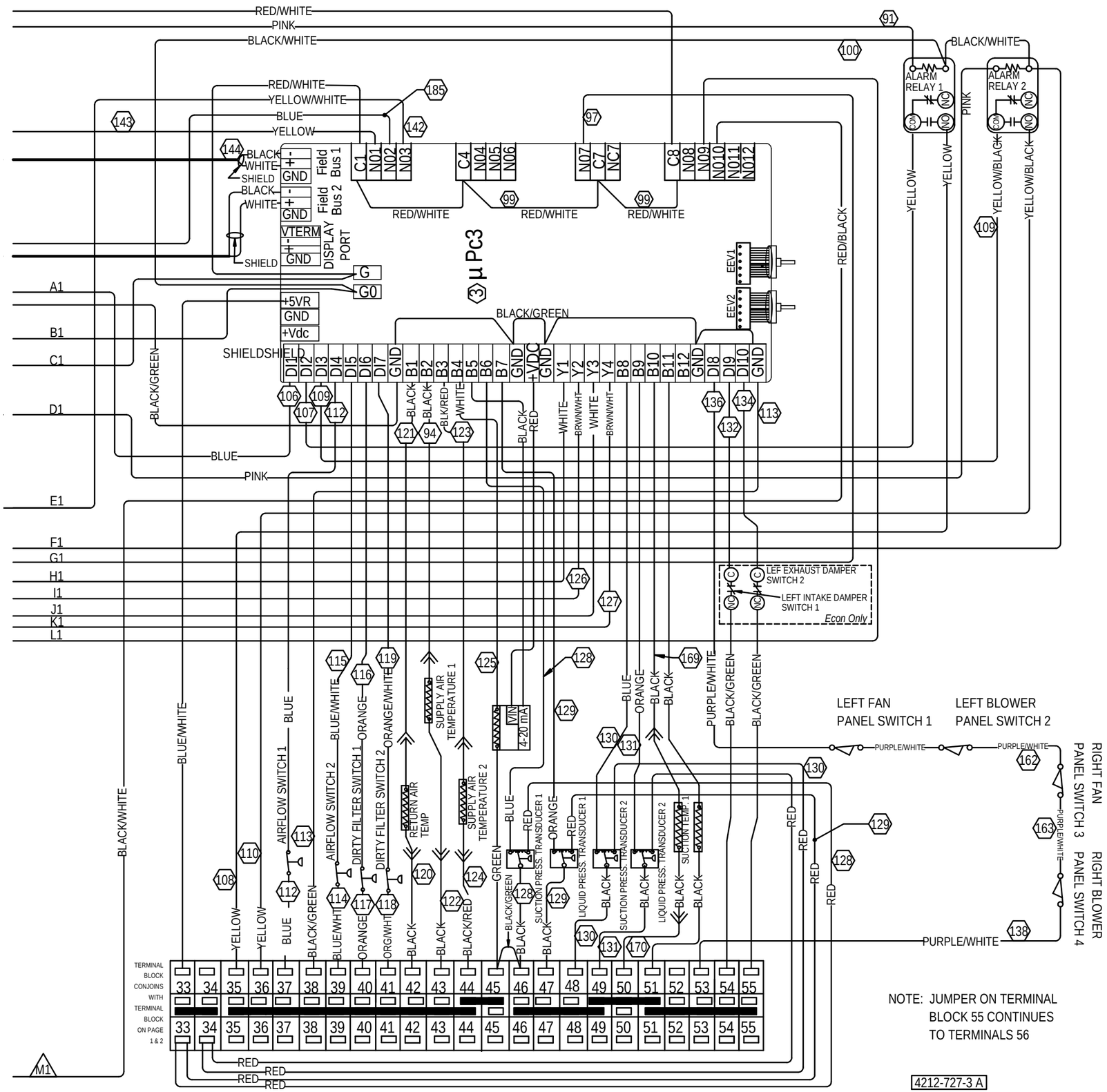

NOTE: JUMPER ON TERMINAL BLOCK 55 CONTINUES TO TERMINALS 56

4212-727-3 A