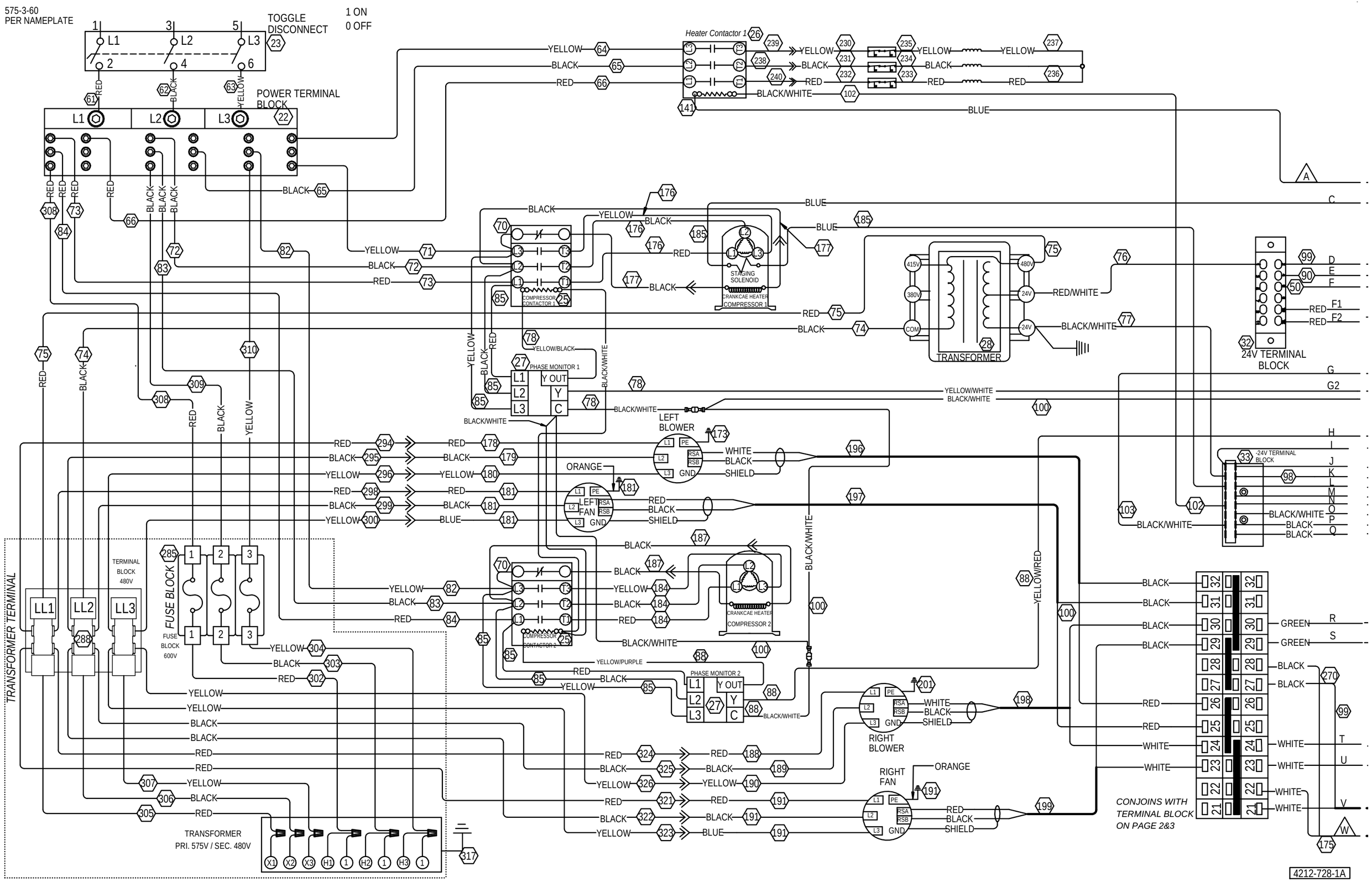
575-3-60
PER NAMEPLATE
TOGGLE DISCONNECT
1 ON
0 OFF
POWER TERMINAL BLOCK
Heater Contactor 1
COMPRESSOR CONTACTOR 1
STAGING SOLENOID
CRANKCAE HEATER
COMPRESSOR 1
TRANSFORMER
24V TERMINAL BLOCK
PHASE MONITOR 1
LEFT BLOWER
LEFT FAN
COMPRESSOR CONTACTOR 2
CRANKCAE HEATER
COMPRESSOR 2
PHASE MONITOR 2
RIGHT BLOWER
RIGHT FAN
TRANSFORMER TERMINAL
TERMINAL BLOCK 480V
FUSE BLOCK
FUSE BLOCK 600V
TRANSFORMER
PRI. 575V / SEC. 480V
CONJOINS WITH TERMINAL BLOCK ON PAGE 2&3
4212-728-1A

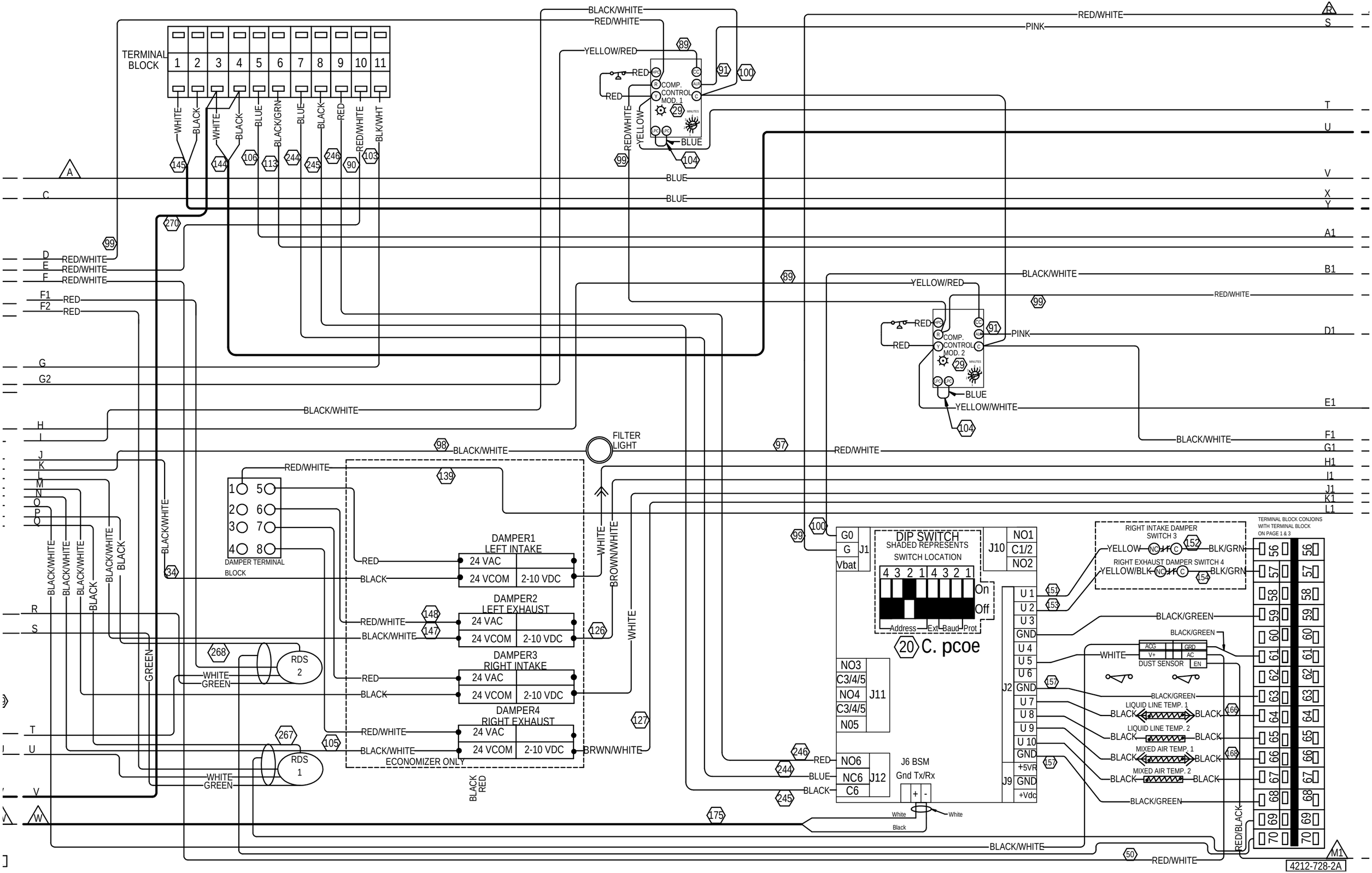

TERMINAL BLOCK
1 2 3 4 5 6 7 8 9 10 11
WHITE
BLACK
WHITE
BLACK
BLUE
BLACK/GRN
BLUE
BLACK
RED
RED/WHITE
BLK/WHT
BLACK/WHITE
RED/WHITE
YELLOW/RED
RED
RED
COMP. CONTROL MOD. 1
RED/WHITE
YELLOW
BLUE
BLUE
BLUE
RED/WHITE
PINK
COMP. CONTROL MOD. 2
YELLOW/WHITE
FILTER LIGHT
DAMPER TERMINAL BLOCK
DAMPER1 LEFT INTAKE
DAMPER2 LEFT EXHAUST
DAMPER3 RIGHT INTAKE
DAMPER4 RIGHT EXHAUST
24 VAC
24 VCOM
2-10 VDC
ECONOMIZER ONLY
BLACK RED
BRWN/WHITE
WHITE
BROWN/WHITE
RDS 2
RDS 1
GREEN
DIP SWITCH
SHADED REPRESENTS SWITCH LOCATION
On
Off
Address
Ext
Baud
Prot
20 C. pcoe
J1
J10
J11
J12
J2
J9
J6 BSM
Gnd Tx/Rx
+5VR
+Vdc
RIGHT INTAKE DAMPER SWITCH 3
RIGHT EXHAUST DAMPER SWITCH 4
YELLOW
YELLOW/BLK
BLK/GRN
BLACK/GREEN
DUST SENSOR
LIQUID LINE TEMP. 1
LIQUID LINE TEMP. 2
MIXED AIR TEMP. 1
MIXED AIR TEMP. 2
TERMINAL BLOCK CONJOINS WITH TERMINAL BLOCK ON PAGE 1 & 3
RED/BLACK
4212-728-2A

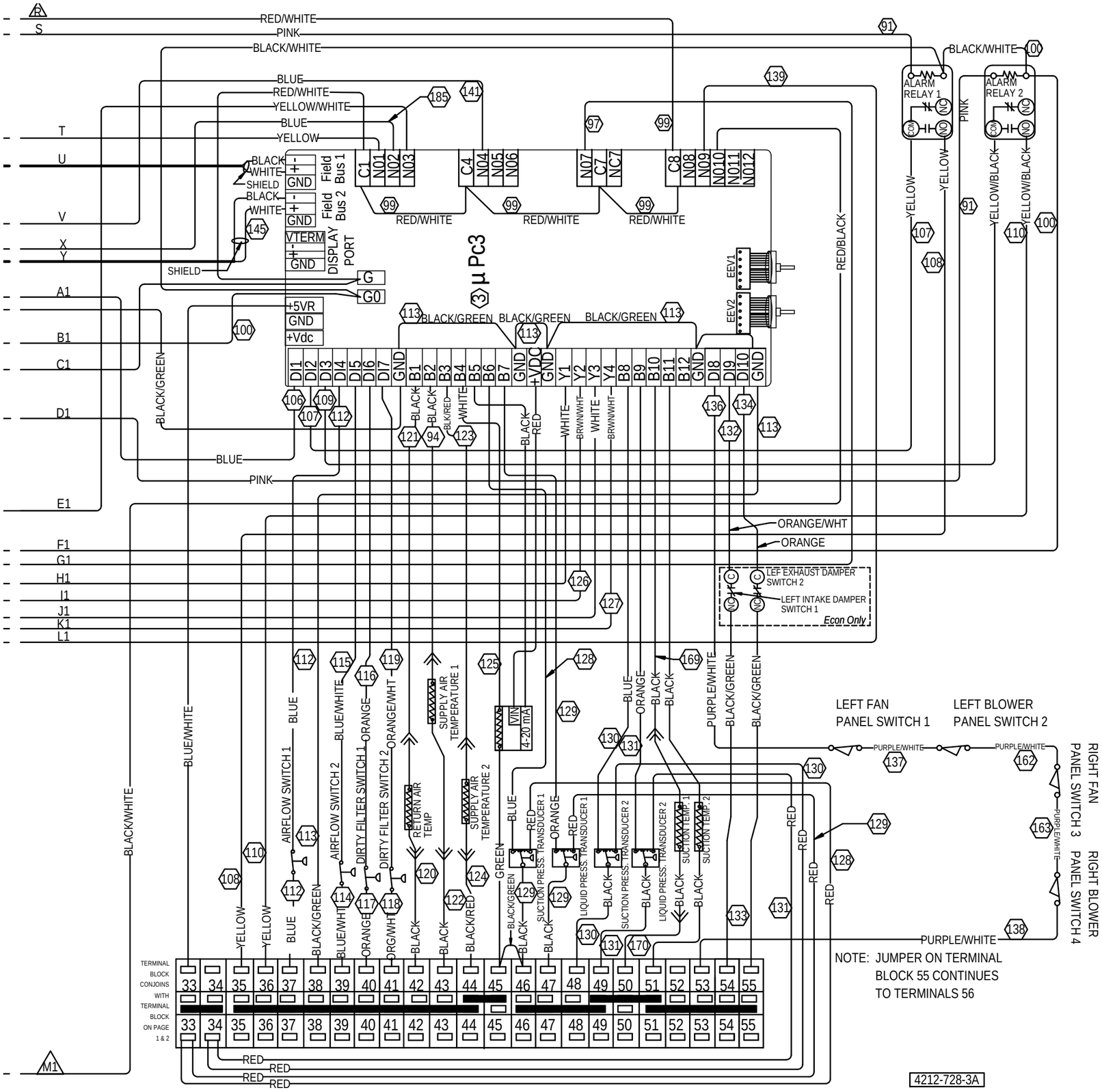
RED/WHITE
PINK
BLACK/WHITE
BLUE
YELLOW/WHITE
YELLOW
ALARM RELAY 1
ALARM RELAY 2
COM
NO
Field Bus 1
Field Bus 2
DISPLAY PORT
VTERM
GND
SHIELD
µ Pc3
EEV1
EEV2
+5VR
+Vdc
BLACK/GREEN
RED/BLACK
YELLOW/BLACK
ORANGE/WHT
ORANGE
LEF EXHAUST DAMPER SWITCH 2
LEFT INTAKE DAMPER SWITCH 1
Econ Only
LEFT FAN PANEL SWITCH 1
LEFT BLOWER PANEL SWITCH 2
RIGHT FAN PANEL SWITCH 3
RIGHT BLOWER PANEL SWITCH 4
PURPLE/WHITE
AIRFLOW SWITCH 1
AIRFLOW SWITCH 2
DIRTY FILTER SWITCH 1
DIRTY FILTER SWITCH 2
RETURN AIR TEMP
SUPPLY AIR TEMPERATURE 1
SUPPLY AIR TEMPERATURE 2
4-20 mA
SUCTION PRESS. TRANSDUCER 1
LIQUID PRESS. TRANSDUCER 1
SUCTION PRESS. TRANSDUCER 2
LIQUID PRESS. TRANSDUCER 2
SUCTION TEMP. 1
SUCTION TEMP. 2
TERMINAL BLOCK CONJOINS WITH TERMINAL BLOCK ON PAGE 1 & 2
NOTE: JUMPER ON TERMINAL BLOCK 55 CONTINUES TO TERMINALS 56
4212-728-3A