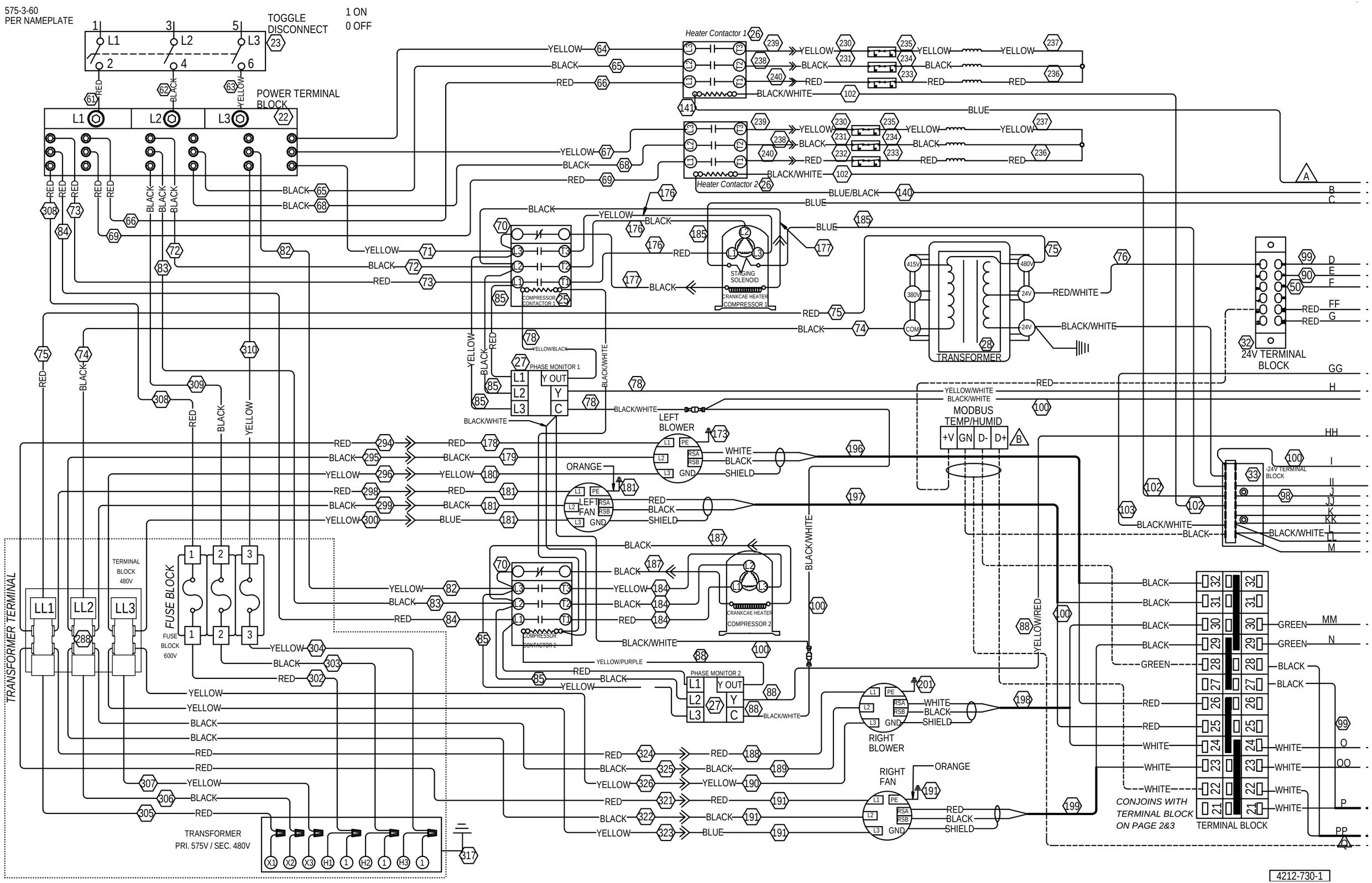
575-3-60
PER NAMEPLATE
TOGGLE DISCONNECT
1 ON
0 OFF
POWER TERMINAL BLOCK
Heater Contactor 1
Heater Contactor 2
COMPRESSOR CONTACTOR 1
COMPRESSOR CONTACTOR 2
STAGING SOLENOID
CRANKCAE HEATER
COMPRESSOR 1
COMPRESSOR 2
PHASE MONITOR 1
PHASE MONITOR 2
TRANSFORMER
24V TERMINAL BLOCK
-24V TERMINAL BLOCK
MODBUS TEMP/HUMID
+V GN D- D+
LEFT BLOWER
LEFT FAN
RIGHT BLOWER
RIGHT FAN
TRANSFORMER TERMINAL
TERMINAL BLOCK 480V
FUSE BLOCK
FUSE BLOCK 600V
TRANSFORMER
PRI. 575V / SEC. 480V
CONJOINS WITH TERMINAL BLOCK ON PAGE 2&3
TERMINAL BLOCK
4212-730-1

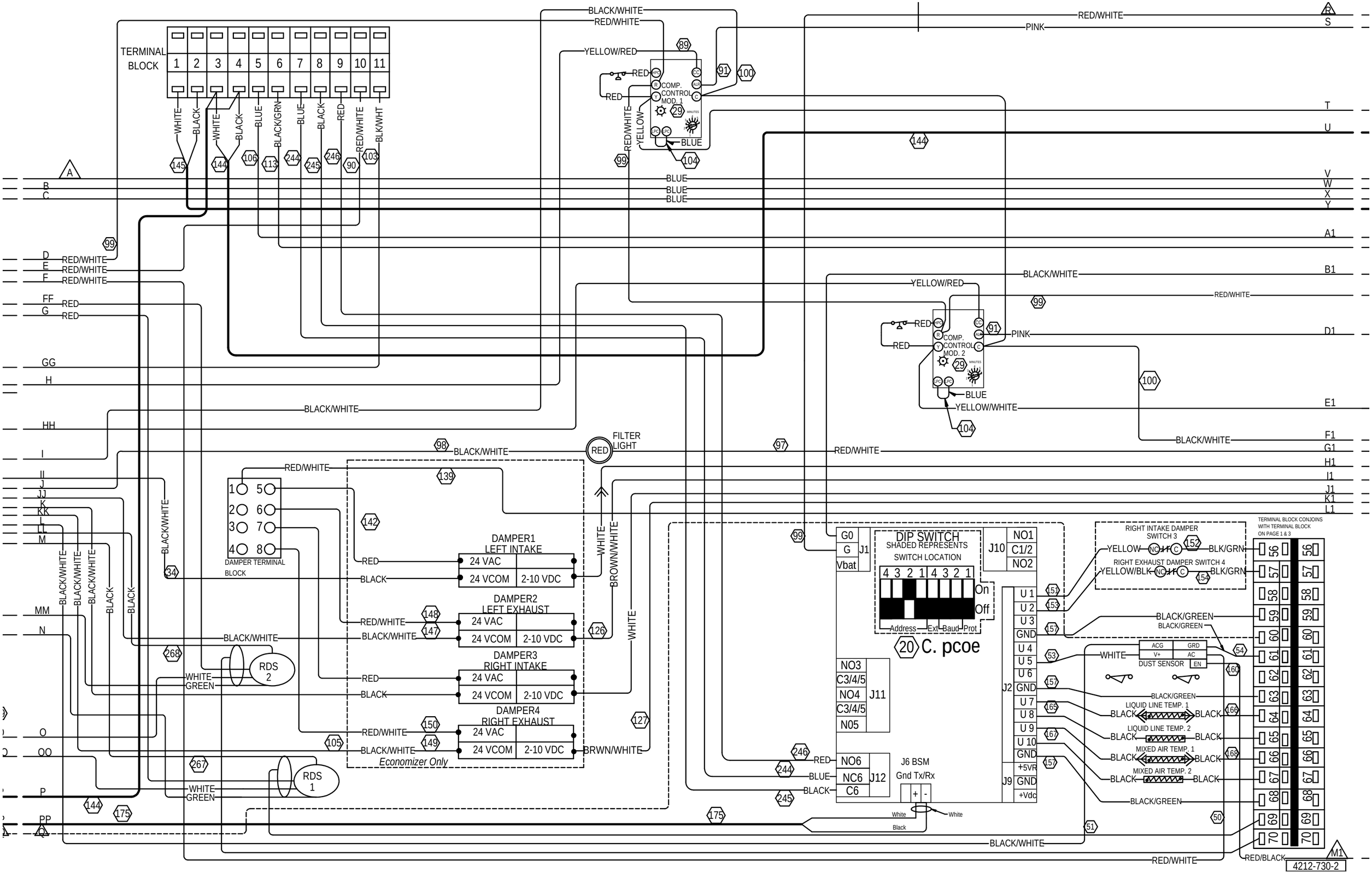
TERMINAL BLOCK
1 2 3 4 5 6 7 8 9 10 11
WHITE
BLACK
WHITE
BLACK
BLUE
BLACK/GRN
BLUE
BLACK
RED
RED/WHITE
BLK/WHT
145
144
106
113
244
245
246
90
103
99
A
B
C
D
E
F
FF
G
GG
H
HH
I
II
J
JJ
K
KK
L
LL
M
MM
N
O
OO
P
PP
Q
RED/WHITE
RED/WHITE
RED/WHITE
RED
RED
BLACK/WHITE
BLACK/WHITE
BLACK/WHITE
BLACK
BLACK
BLACK/WHITE
BLACK/WHITE
BLACK/WHITE

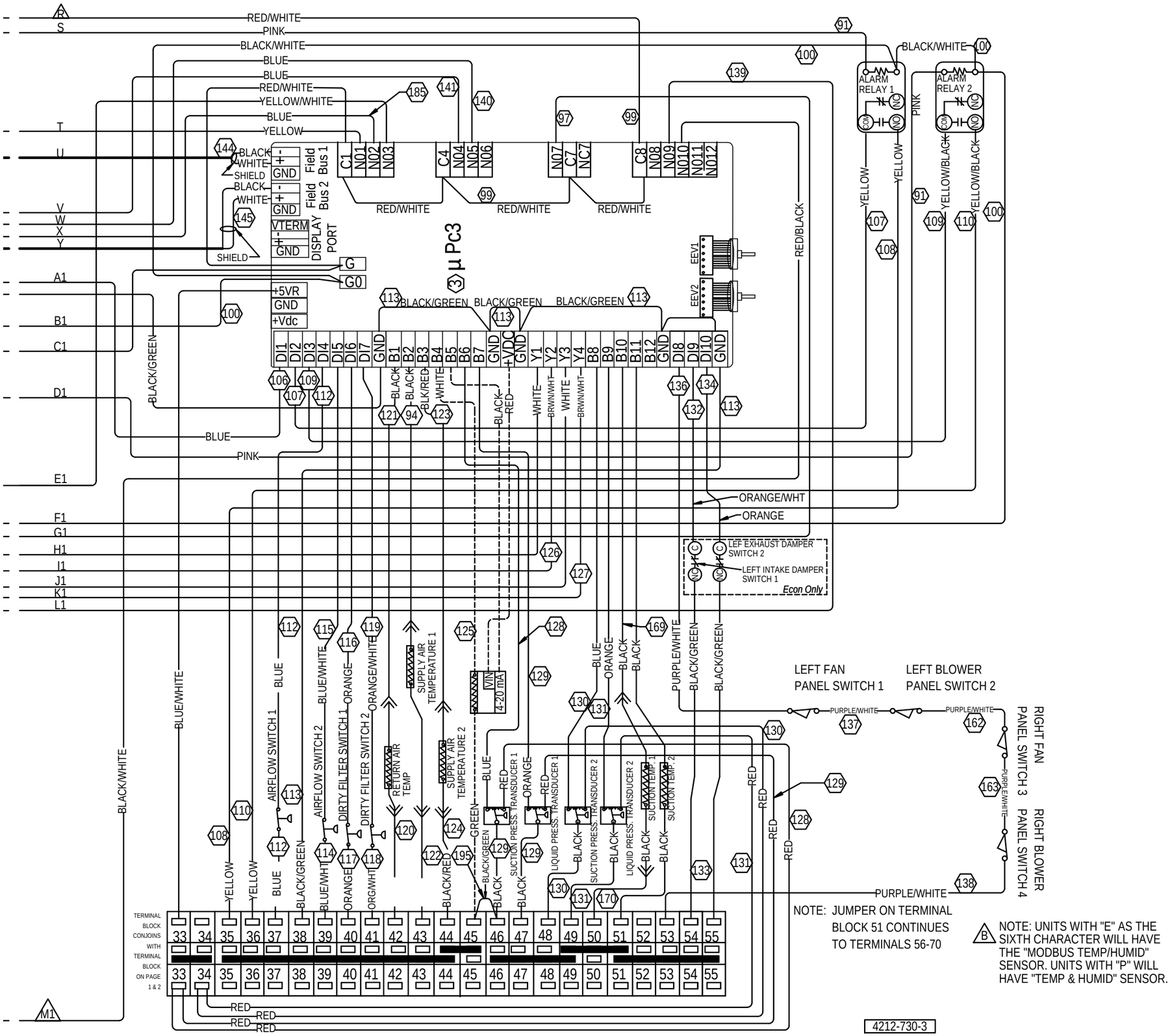
RED/WHITE
PINK
BLACK/WHITE
BLUE
YELLOW/WHITE
YELLOW
ALARM RELAY 1
ALARM RELAY 2
COM
NO
YELLOW/BLACK
Field Bus 1
Field Bus 2
DISPLAY PORT
VTERM
GND
SHIELD
µ Pc3
EEV1
EEV2
+5VR
+Vdc
BLACK/GREEN
RED/BLACK
ORANGE/WHT
ORANGE
LEF EXHAUST DAMPER SWITCH 2
LEFT INTAKE DAMPER SWITCH 1
Econ Only
SUPPLY AIR TEMPERATURE 1
4-20 mA
VIN
AIRFLOW SWITCH 1
AIRFLOW SWITCH 2
DIRTY FILTER SWITCH 1
DIRTY FILTER SWITCH 2
RETURN AIR TEMP
SUPPLY AIR TEMPERATURE 2
SUCTION PRESS. TRANSDUCER 1
LIQUID PRESS. TRANSDUCER 1
SUCTION PRESS. TRANSDUCER 2
LIQUID PRESS. TRANSDUCER 2
SUCTION TEMP. 1
SUCTION TEMP. 2
LEFT FAN PANEL SWITCH 1
LEFT BLOWER PANEL SWITCH 2
RIGHT FAN PANEL SWITCH 3
RIGHT BLOWER PANEL SWITCH 4
PURPLE/WHITE
TERMINAL BLOCK CONJOINS WITH TERMINAL BLOCK ON PAGE 1 & 2
NOTE: JUMPER ON TERMINAL BLOCK 51 CONTINUES TO TERMINALS 56-70
NOTE: UNITS WITH "E" AS THE SIXTH CHARACTER WILL HAVE THE "MODBUS TEMP/HUMID" SENSOR. UNITS WITH "P" WILL HAVE "TEMP & HUMID" SENSOR.
4212-730-3