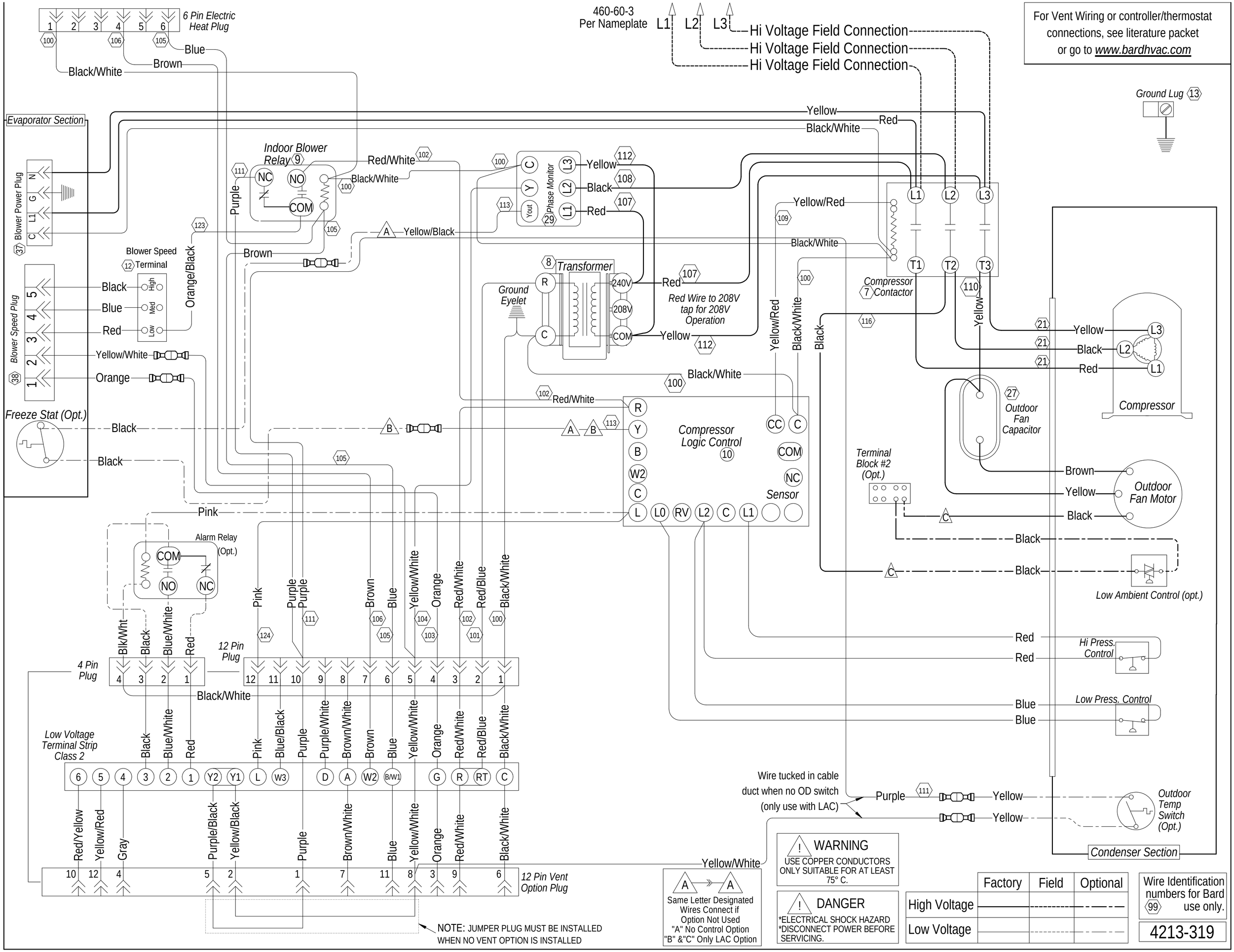
6 Pin Electric Heat Plug
460-60-3 Per Nameplate
L1
L2
L3
Hi Voltage Field Connection
Hi Voltage Field Connection
Hi Voltage Field Connection
For Vent Wiring or controller/thermostat connections, see literature packet or go to www.bardhvac.com
Ground Lug 13
Evaporator Section
Blower Power Plug
Blower Speed Plug
Indoor Blower Relay 9
Phase Monitor
Transformer
Ground Eyelet
Red Wire to 208V tap for 208V Operation
Compressor Contactor 7
Blower Speed Terminal
High
Med
Low
Freeze Stat (Opt.)
Compressor Logic Control 10
Sensor
Terminal Block #2 (Opt.)
Outdoor Fan Capacitor
Compressor
Outdoor Fan Motor
Low Ambient Control (opt.)
Hi Press. Control
Low Press. Control
Outdoor Temp Switch (Opt.)
Condenser Section
Alarm Relay (Opt.)
4 Pin Plug
12 Pin Plug
Low Voltage Terminal Strip Class 2
12 Pin Vent Option Plug
Wire tucked in cable duct when no OD switch (only use with LAC)
NOTE: JUMPER PLUG MUST BE INSTALLED WHEN NO VENT OPTION IS INSTALLED
Same Letter Designated Wires Connect if Option Not Used
"A" No Control Option
"B" &"C" Only LAC Option
WARNING
USE COPPER CONDUCTORS ONLY SUITABLE FOR AT LEAST 75° C.
DANGER
*ELECTRICAL SHOCK HAZARD
*DISCONNECT POWER BEFORE SERVICING.
Factory
Field
Optional
High Voltage
Low Voltage
Wire Identification numbers for Bard use only.
4213-319