INSTALLATION INSTRUCTIONS

QTEC SERIES PACKAGED HEAT PUMP

Models:

QH242D QH302D
QH362D QH422D
QH482D QH602D

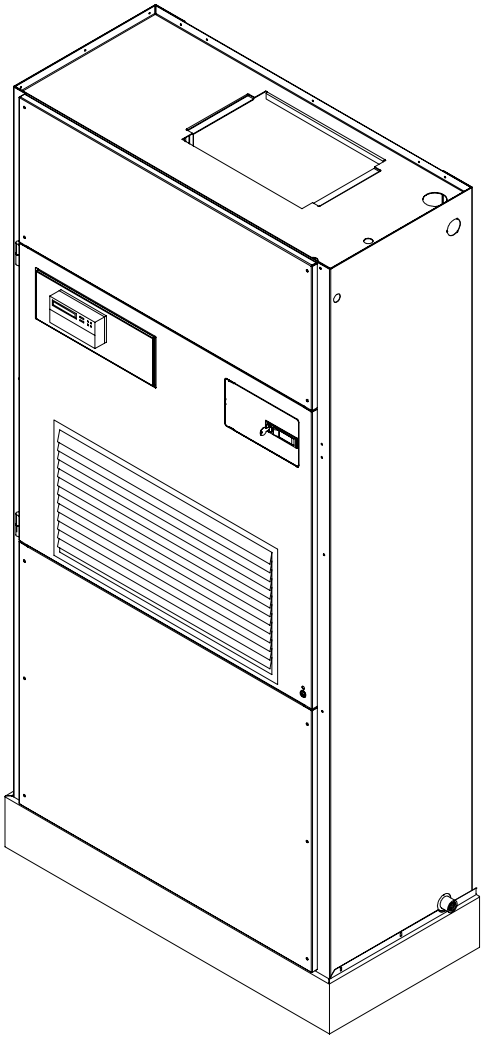

MIS-1554

Bard Manufacturing Company
Bryan, Ohio 43506

Since 1914 . . . Moving ahead, just as planned.

Manual: 2100-380C
Supersedes: 2100-380B
File: Vol II Tab 14
Date: 10-11-01

© Copyright 2001

CONTENTS

Getting Other Information and Publications
For more information, contact these publishers: 1

QTEC General Information
QTEC Model Nomenclature 2
Shipping Damage 6
Unit Removal From Skid 6
Handling Unit After Removal From Skid 7
General 7
Minimum Installation Height 7
Duct Work 9
Filters 9
Fresh Air Intake 10
Condensate Drain 10
Service Light 11

Installation Instructions
Mounting the Unit 12
Wiring — Main Power 13
Wiring — Low Voltage Wiring 13
Low Voltage Connections 14

Start Up
Description of Standard Equipment 21
Optional CFM 21
Important Installer Note 21
Phase Monitor 21
Three Phase Scroll Compressor Start Up Information 21
Service Hints 22
Mist Eliminator Service 22
Vent Options 23
Sequence of Operation 26
Optional Climate Controls Sequence of Operation 26
Refrigerant Tube Schematic for Reheat Coil 27
Pressure Service Ports 27
Defrost Cycle 30

Troubleshooting
Solid State Heat Pump Control Troubleshooting Procedure 32
Checking Temperature Sensor 32
Fan Blade Setting Dimensions 33
Refrigerant Charge 33
Pressure Charts 34-35

Figures

Figure 1 Unit Dimensions 5
Figure 2 Air Seal on Bottom of Unit 6
Figure 3 Removal of Unit From Skid 6
Figure 4 Unit on Appliance Cart 7
Figure 5 Installation With Free Blow Plenum 8
Figure 6 Ducted Application 8
Figure 7 Supply Duct Connections 9
Figure 8 Filter Location 9
Figure 9 Side Drain 10
Figure 10 Optional Rear Drain 10
Figure 11 Rear Drain (Top View) 11
Figure 12 Unit Mounting 11
Figure 13 Removing Locking Screws From Wheels 12
Figure 14 Component Location 13
Figure 15 Thermostat Plug Terminals 15
Figure 16 Thermostat Wiring Diagram "X" Option 16
Figure 16-1 Details on LVTB Connections 17
Figure 16A Thermostat Wiring Diagram "E" Option 18
Figure 16B Thermostat Wiring Diagram "F" Option 19
Figure 16C Thermostat Wiring Diagram "G" Option 20
Figure 17 Fresh Air Damper Removal 24
Figure 18 QERV Removal 25
Figure 19 Dehumidification Mode Circuit 28
Figure 20 Cooling Mode Circuit 29
Figure 21 Heat Pump Control Board 30
Figure 22 Fan Blade Setting 33

Tables

Table 1 Factory Built-In Electric Heat Table 2
Table 2 Electrical Specifications 3
Table 2A Electrical Specifications 4
Table 3 Operating Voltage Range 13
Table 4 Wall Thermostats and Subbase Combinations 15
Table 5 Troubleshooting 31
Table 6 Temperature vs Resistance of Temperature Sensor 32
Table 7 Fan Blade Dimensions 33
Table 8 Super Heat at Compressor 33
Table 9 Indoor Blower Performance 33
Table 10 Cooling Pressure 34
Table 11 Heating Pressure 35

GETTING OTHER INFORMATION AND PUBLICATIONS

These publications can help you install the air conditioner or heat pump. You can usually find these at your local library or purchase them directly from the publisher. Be sure to consult current edition of each standard.

National Electrical Code ..... ANSI/NFPA 70

Standard for the Installation ..... ANSI/NFPA 90A
of Air Conditioning and
Ventilating Systems

Standard for Warm Air ..... ANSI/NFPA 90B
Heating and Air
Conditioning Systems

Load Calculation for ..... ACCA Manual J or
Winter and Summer Manual N
Air Conditioning

Low Pressure, Low Velocity ..... ACCA Manual D or
Duct System Design Manual Q
Winter and Summer
Air Conditioning

FOR MORE INFORMATION, CONTACT THESE PUBLISHERS:

ACCA **Air Conditioning Contractors of America**
1712 New Hampshire Avenue
Washington, DC 20009
Telephone: (202) 483-9370
Fax: (202) 234-4721

ANSI **American National Standards Institute**
11 West Street, 13th Floor
New York, NY 10036
Telephone: (212) 642-4900
Fax: (212) 302-1286

ASHRAE **American Society of Heating, Refrigeration, and Air Conditioning Engineers, Inc.**
1791 Tullie Circle, N.E.
Atlanta, GA 30329-2305
Telephone: (404) 636-8400
Fax: (404) 321-5478

NFPA **National Fire Protection Association**
Batterymarch Park
P.O. Box 9101
Quincy, MA 02269-9901
Telephone: (800) 344-3555
Fax: (617) 984-7057

QTEC Series General Information

QTEC MODEL NOMENCLATURE

QH 36 2 D A 10 X X X X X X

MODEL NUMBER
QH - QTEC Model

CAPACITY
24 - 2 Ton
30 - 2-1/2 Ton
36 - 3 Ton
42 - 3-1/2 Ton
48 - 4 Ton
60 - 5 Ton

REVISION

SPECIAL UNITS
D - Dehumidification w/Hot Gas Reheat

VOLTS & PHASE
A - 230/208/60/1
B - 230/208/60/3
C - 460/60/3

KW
0Z - 0KW
05 - 5KW
06 - 6KW
09 - 9KW
10 - 10KW
12 - 12KW
15 - 15KW

VENTILATION OPTIONS
X - Barometric Fresh Air Damper (Standard)
B - Blank-off Plate
R - Energy Recovery Ventilator w/Exhaust
P - Commercial Ventilator - Motorized w/Exhaust Power Return
V - Commercial Ventilator - Motorized w/Exhaust Spring Return

FILTER OPTIONS
X - 1 Inch Fiberglass (Standard)
F - 2 Inch Fiberglass
P - 2 Inch Pleated

COLOR OPTIONS
V - Platinum w/Slate Front (Vinyl)
4 - Gray paint

CLIMATE CONTROL OPTIONS
X - None
E - Electronic/Prog/Man/Auto/Humidistat
F - Electronic/Non Prog/Man/Auto/ Humidistat/6 hour timer
G - Electronic/Non Prog/Man/Auto/ Humidistat

COIL OPTIONS
X - Standard

INTERNAL CONTROLS
X - Standard
- High Pressure Switch
- Low Pressure Switch
- Compressor Time Delay

E - Low Ambient Control
Q - Outdoor Thermostat
R - Low Ambient Control & Outdoor Thermostat

TABLE 1
FACTORY BUILT-IN ELECTRIC HEAT TABLE

Models	QH242DA QH302DA		QH242DB		QH302DB		QH242DC	QH302DC	QH362DA QH422DA QH482DA QH602DA		QH362DB QH422DB QH482DB QH602DB		QH362DC QH422DC QH482DC QH602DC
	240V-1	208V-1	240V-1	208V-1	240V-1	208V-1	480V-3	480V-3	240V-1	208V-1	240V-1	208V-1	480V-3
KW	BTUH	BTUH	BTUH	BTUH	BTUH	BTUH	BTUH	BTUH	BTUH	BTUH	BTUH	BTUH	BTUH
5.0	16,380	12,290											
6.0			20,500	15,360	20,500	15,360	20,500	20,500			20,500	15,360	20,500
9.0			30,700	23,000	30,700	23,000	30,700	30,700			30,700	23,000	30,700
10.0	32,670	24,570							32,670	24,570			
12.0					41,000	30,700		41,000					
15.0									49,150	36,860	49,150	36,860	49,150

TABLE 2
ELECTRICAL SPECIFICATIONS

MODELS	RATED VOLTS & PHASES	SINGLE CIRCUIT					DUAL CIRCUIT							
		NO. FIELD POWER CIRCUITS	③ MINIMUM CIRCUIT AMPACITY	① MAXIMUM EXTERNAL FUSE OR CIRCUIT BREAKER	② FIELD POWER WIRE SIZE	② GROUND WIRE SIZE	③ MINIMUM CIRCUIT AMPACITY		MAXIMUM EXTERNAL FUSE OR CIRCUIT BREAKER		② FIELD POWER WIRE SIZE		② GROUND WIRE SIZE	
							CKT A	CKT B	CKT A	CKT B	CKT A	CKT B	CKT A	CKT B
QH242DA0Z	230/208-1	1	22	30	10	10	--	--	--	--	--	--	--	--
DA05		1	47	50	8	10	--	--	--	--	--	--	--	--
DA10		1 OR 2	72	80	4	8	22	50	30	50	10	8	10	10
QH242DB0Z	230/208-3	1	17	20	12	12	--	--	--	--	--	--	--	--
DB06		1	35	35	8	10	--	--	--	--	--	--	--	--
DB09		1	44	45	8	10	--	--	--	--	--	--	--	--
QH242DC0Z	460-3	1	8	15	14	14	--	--	--	--	--	--	--	--
DC06		1	17	20	12	12	--	--	--	--	--	--	--	--
DC09		1	22	25	10	10	--	--	--	--	--	--	--	--
QH302DA0Z	230/208-1	1	24	35	8	10	--	--	--	--	--	--	--	--
DA05		1	49	50	8	10	--	--	--	--	--	--	--	--
DA10		1 OR 2	74	80	4	8	24	50	30	50	10	8	10	10
QH302DB0Z	230/208-3	1	18	25	10	10	--	--	--	--	--	--	--	--
DB06		1	36	40	8	10	--	--	--	--	--	--	--	--
DB09		1	45	45	6	10	--	--	--	--	--	--	--	--
DB12		1	54	60	6	10	--	--	--	--	--	--	--	--
QH302DC0Z	460-3	1	9	15	14	14	--	--	--	--	--	--	--	--
DC06		1	18	20	12	12	--	--	--	--	--	--	--	--
DC09		1	23	25	10	10	--	--	--	--	--	--	--	--
DC12		1	27	30	8	10	--	--	--	--	--	--	--	--
QH362DA0Z	230/208-3	1	29	45	8	10	--	--	--	--	--	--	--	--
DA05		1	54	60	6	10	--	--	--	--	--	--	--	--
DA10		1 OR 2	79	90	4	8	29	50	40	50	8	8	10	10
④ DA15		1 OR 2	82	90	4	8	32	50	40	50	8	8	10	10
QH362DB0Z	230/208-3	1	23	30	10	10	--	--	--	--	--	--	--	--
DB06		1	41	45	8	10	--	--	--	--	--	--	--	--
DB09		1	50	50	8	10	--	--	--	--	--	--	--	--
⑤ DB15		1	52	60	6	10	--	--	--	--	--	--	--	--
QH362DC0Z	460-3	1	11	15	14	14	--	--	--	--	--	--	--	--
DC06		1	20	20	10	10	--	--	--	--	--	--	--	--
DC09		1	24	30	10	10	--	--	--	--	--	--	--	--
⑤ DC15		1	26	30	10	10	--	--	--	--	--	--	--	--

① Maximum size of the time delay fuse or HACR type circuit breaker for protection of field wiring conductors.

② Based on 75° C copper wire. All wiring must conform to the National Electrical Code and all local codes.

③ These "Minimum Circuit Ampacity" values are to be used for sizing the field power conductors. Refer to the National Electric Code (latest revision), article 310 for power conductor sizing. CAUTION: When more than one field power conductor circuit is run through one conduit, the conductors must be derated. Pay special attention to Note 8 of Table 310 regarding Ampacity Adjustment Factors when more than three conductors are in a raceway.

④ Maximum KW that can operate with heat pump on is 10KW. Other 5KW energizes during emergency heating only.

⑤ Maximum KW that can operate with heat pump on is 9KW. Other 6KW energizes during emergency heating only.

ELECTRICAL SPECIFICATIONS Continued on Page 4 TABLE 2A

TABLE 2A
ELECTRICAL SPECIFICATIONS
(continued from Page 3)

Model No.	Rated Volts & Phases	SINGLE CIRCUIT					DUAL CIRCUIT							
		No. Field Power Circuits	③ Minimum Circuit Ampacity	① Maximum External Fuse or Circuit Breaker	② Field Power Wire Size	② Ground Wire Size	③ Minimum Circuit Ampacity		① Maximum External Fuse or Circuit Breaker		② Field Power Wire Size		② Ground Wire Size	
							CKT A	CKT B	CKT A	CKT B	CKT A	CKT B	CKT A	CKT B
QH422DA0Z	230/208-1	1	33	50	8	10	–	–	–	–	–	–	–	–
DA05		1	58	60	6	10	–	–	–	–	–	–	–	–
DA10		1or 2	83	90	4	8	33	50	40	50	8	8	10	10
④ DA15		1 or 2	83	90	4	8	33	50	40	50	8	8	10	10
QH422DB0Z	230/208-3	1	24	30	10	10	–	–	–	–	–	–	–	–
DB06		1	43	45	8	10	–	–	–	–	–	–	–	–
DB09		1	52	50	6	10	–	–	–	–	–	–	–	–
⑤ DB15		1	52	60	6	10	–	–	–	–	–	–	–	–
QH422DC0Z	460-3	1	16	20	12	12	–	–	–	–	–	–	–	–
DC06		1	25	25	10	10	–	–	–	–	–	–	–	–
DC09		1	30	30	10	10	–	–	–	–	–	–	–	–
⑤ DC15		1	30	30	10	10	–	–	–	–	–	–	–	–
QH428DA0Z	230/208-1	1	36	60	8	10	–	–	–	–	–	–	–	–
DA05		1	61	70	6	8	36	25	60	25	8	10	10	10
DA10		1 or 2	86	100	3	8	36	50	60	50	8	8	10	10
④ DA15		1 or 2	86	100	3	8	36	50	60	50	8	8	10	10
QH482DB0Z	230/208-3	1	26	40	8	10	–	–	–	–	–	–	–	–
DB05		1	44	50	8	10	–	–	–	–	–	–	–	–
DB10		1	53	60	6	10	–	–	–	–	–	–	–	–
⑤ DB15		1	53	60	6	10	–	–	–	–	–	–	–	–
QH482DC0Z	460-3	1	14	15	14	14	–	–	–	–	–	–	–	–
DC06		1	23	25	10	10	–	–	–	–	–	–	–	–
DC09		1	27	30	10	10	–	–	–	–	–	–	–	–
⑤ DC15		1	27	30	10	10	–	–	–	–	–	–	–	–
QH602DA0Z	230/208-1	1	48	60	8	10	–	–	–	–	–	–	–	–
DA05		1 or 2	73	90	4	8	48	25	60	25	8	10	10	10
DA10		1 or 2	98	110	3	6	48	50	60	50	8	8	10	10
DA15		1 or 2	98	110	3	6	48	50	60	50	8	8	10	10
QH602DB0Z	230/208-3	1	32	45	8	10	–	–	–	–	–	–	–	–
DB09		1	59	70	6	10	–	–	–	–	–	–	–	–
DB15		1	59	70	6	10	–	–	–	–	–	–	–	–
QH602DC0Z	460-3	1	18	25	10	10	–	–	–	–	–	–	–	–
DC09		1	31	35	8	8	–	–	–	–	–	–	–	–
DC15		1	31	35	8	8	–	–	–	–	–	–	–	–

① **Maximum size of the time delay fuse or HACR type circuit breaker for protection of field wiring conductors.**

② **Based on 75° C copper wire. All wiring must conform to the National Electrical Code and all local codes.**

③ **These "Minimum Circuit Ampacity" values are to be used for sizing the field power conductors. Refer to the National Electric Code (latest revision), article 310 for power conductor sizing. CAUTION: When more than one field power conductor circuit is run through one conduit, the conductors must be derated. Pay special attention to Note 8 of Table 310 regarding Ampacity Adjustment Factors when more than three conductors are in a raceway.**

④ **Maximum KW that can operate with heat pump on is 10KW. Other 5KW energizes during emergency heating only.**

⑤ **Maximum KW that can operate with heat pump on is 9KW. Other 6KW energizes during emergency heating only.**

FIGURE 1
UNIT DIMENSIONS

DIMENSION CHART					
UNIT	DIM. A	DIM. B	DIM. C	DIM. D	DIM. E
QH242D	7.625	42.000	30.000	30.000	43.000
QH302D					
QH362D					
QH422D					
QH482D	10.625	48.000	40.000	40.000	49.000
QH602D					

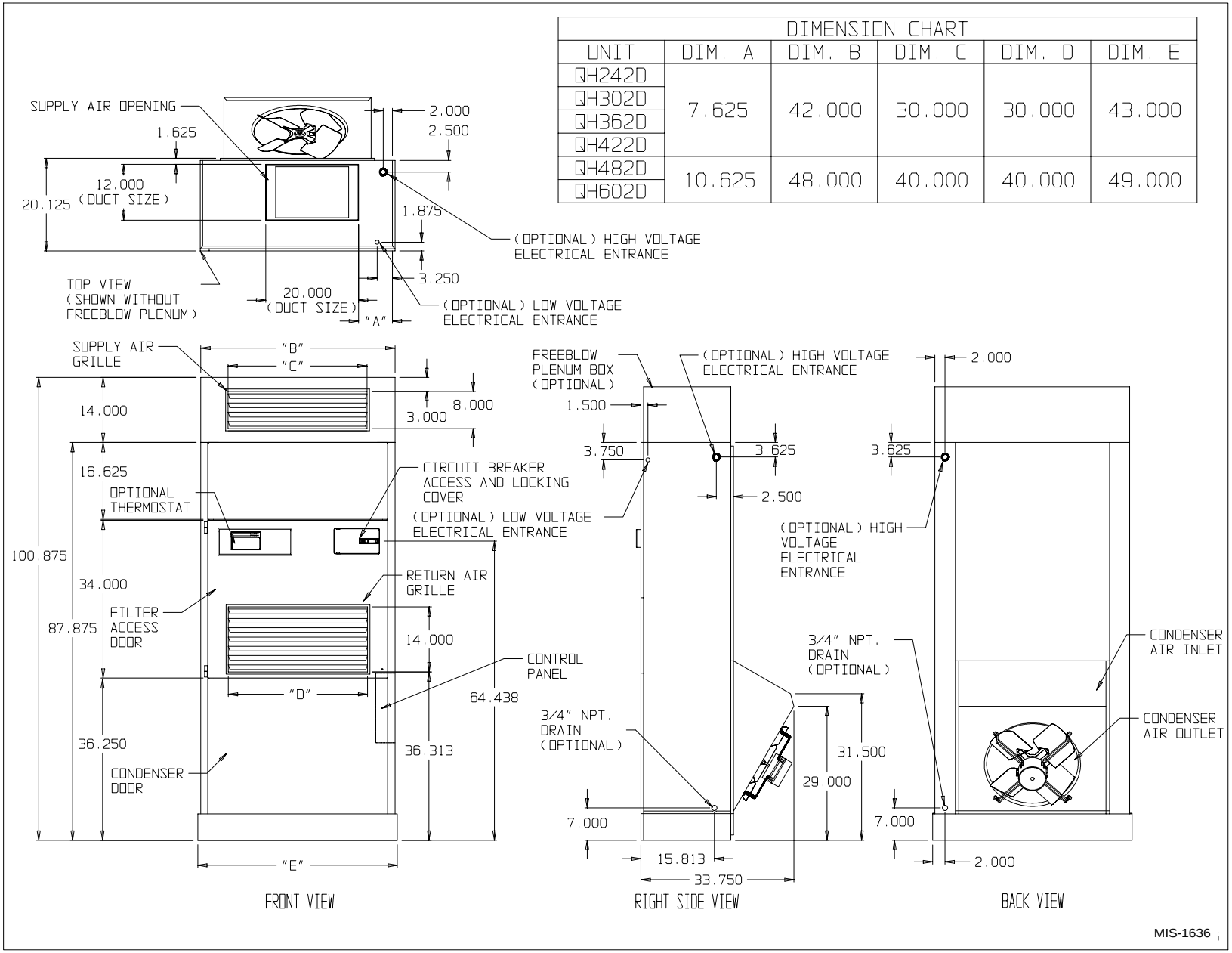

SHIPPING DAMAGE

Upon receipt of equipment, the carton should be checked for external signs of shipping damage. The skid must remain attached to the unit until the unit is ready for installation. If damage is found, the receiving party must contact the last carrier immediately, preferably in writing, requesting inspection by the carrier's agent.

UNIT REMOVAL FROM SKID

⚠ WARNING

This unit is heavy and requires more than one person to handle and remove from the skid. Check unit wheels to ensure that wheels are locked before removing from skid. Extreme caution must be taken to prevent injury to personnel and damage to the unit.

It is recommended that the unit not be removed from the skid with a fork lift since the air seal under the unit could be damaged. See Figure 2.

The shipping brackets on each side of the unit must be removed and discarded. See Figure 3-A. The return air grille panel can be removed to provide a place to hold the unit. The unit can be slid forward on the skit until the front wheels hang over the edge of the skid. See Figure 3-B. The unit can be tipped forward and slid down the edge of the skid until the front wheels touch the ground. See Figure 3-C. The wheels will not roll. They are shipped from the factory locked so they will not roll. The back of the skid will have to be held down to keep it from tipping up. The skid can be slid out from under the unit. The unit can then be set upright.

FIGURE 2
AIR SEAL UNDER QTEC UNIT

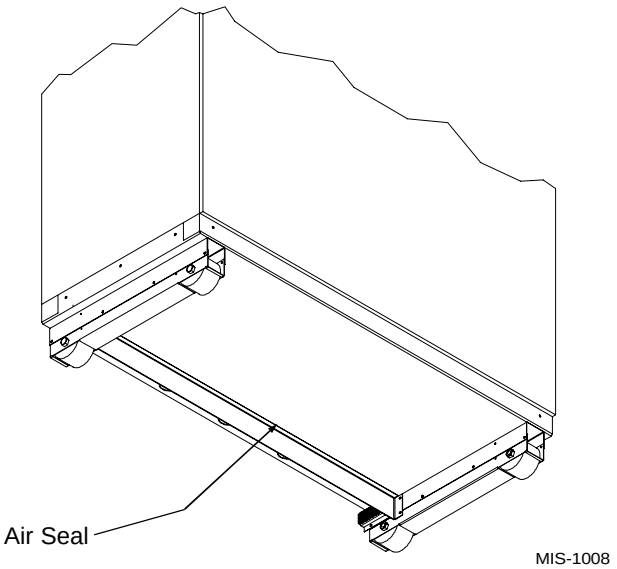

FIGURE 3
REMOVAL OF UNIT FROM SKID

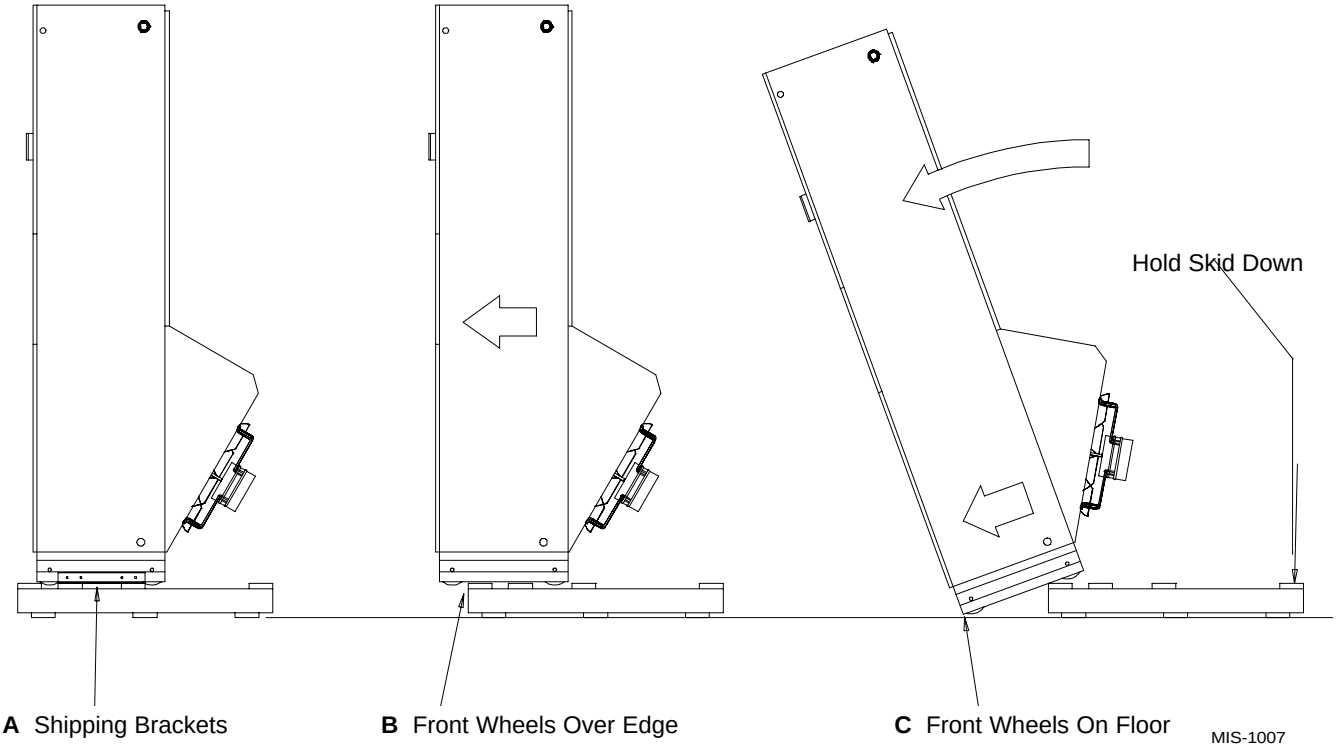

HANDLING UNIT AFTER REMOVAL FROM SKID

⚠ WARNING

Exercise extreme caution when pushing the unit on the rollers. Handle and push from the lower 1/3 of the unit. Insure that debris is not on the floor where the unit is to be moved on the rollers. Failure to do so could result in the unit tipping over and causing bodily injury and/ or damage to the unit.

The unit will have to be turned sideways and removed from the skid to fit through a 36” doorway. If the door height allows, the unit can be slid sideways through the door.

If the unit can not be slid through the door, then the unit will have to be put on a cart and tipped down to roll through the door. It is recommended that an appliance cart by used with a strap to hold the unit on the cart.

FIGURE 4
UNIT ON APPLIANCE CART

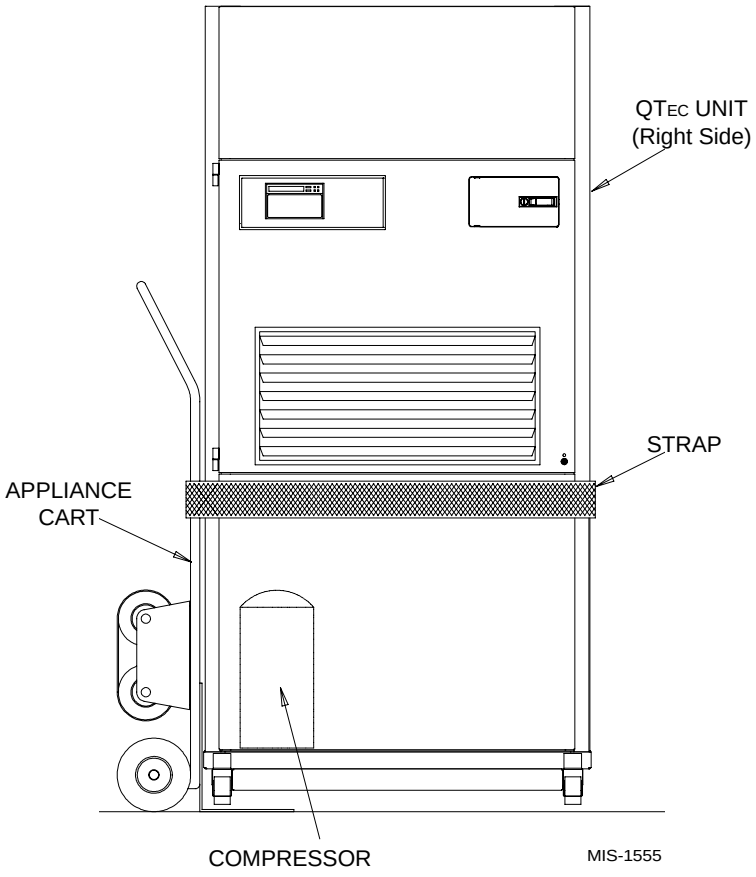

The wheels of the unit ***must be locked***. If the wheels were allowed to roll, the unit could roll off the cart. ***The unit should always be carted from the left side***. This is the side where the compressor is located. See Figure 4. The blade of the appliance cart should be slid under the wheels of the unit. The strap of the appliance cart should be placed around the unit and strapped tightly. Help will be required to tip the unit back onto the cart. The unit can be leaned far enough back to be rolled through the door. Be careful when setting the unit back up to keep from damaging the unit.

GENERAL

The equipment covered in this manual is to be installed by trained, experienced service and installation technicians.

The unit is designed for use with or without duct work. For use without duct work, Plenum Box QPB42 is recommended.

These instructions explain the recommended method to install the air cooled self-contained unit and the electrical wiring connections to the unit.

These instructions and any instructions packaged with any separate equipment required to make up the entire air conditioning system should be carefully read before beginning the installation. Note particularly “Start Procedure” and any tags and/or labels attached to the equipment.

While these instructions are intended as a general recommended guide, they do not supersede any national and/or local codes in any way. Authorities having jurisdiction should be consulted before the installation is made. See Page 1 for information on codes and standards.

Size of unit for a proposed installation should be based on heat loss calculation made according to methods of Air Conditioning Contractors of America (ACCA). The air duct should be installed in accordance with the Standards of the National Fire Protection Systems of Other Than Residence Type, NFPA No. 90A, and Residence Type Warm Air Heating and Air Conditioning Systems, NFPA No. 90B. Where local regulations are at a variance with instructions, installer should adhere to local codes.

MINIMUM INSTALLATION HEIGHT

The minimum installation height of the unit with a Free Blow Plenum is 8 ft. 6 in. This provides enough clearance for the plenum to be removed. See Figure 5.

The minimum installation height for ducted applications is 8 ft. 4-1/2 in. This provides enough clearance to install the duct work. See Figure 6.

FIGURE 5
INSTALLATION WITH FREE BLOW PLENUM

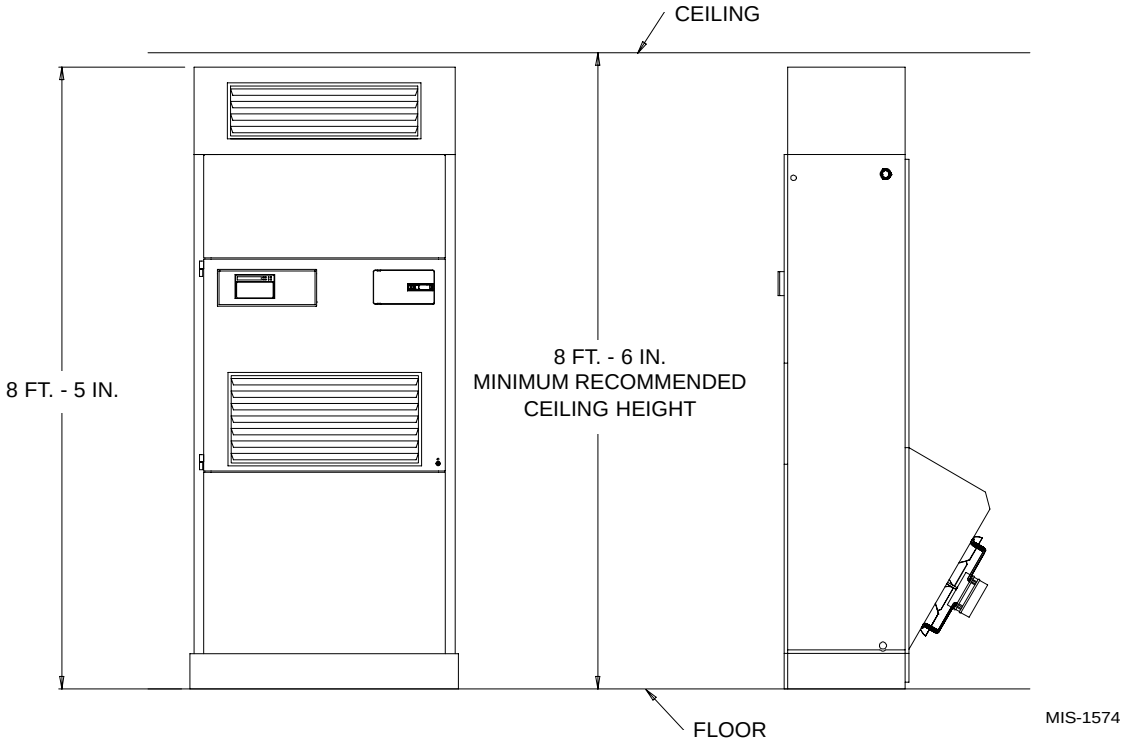

FIGURE 6
DUCTED APPLICATION

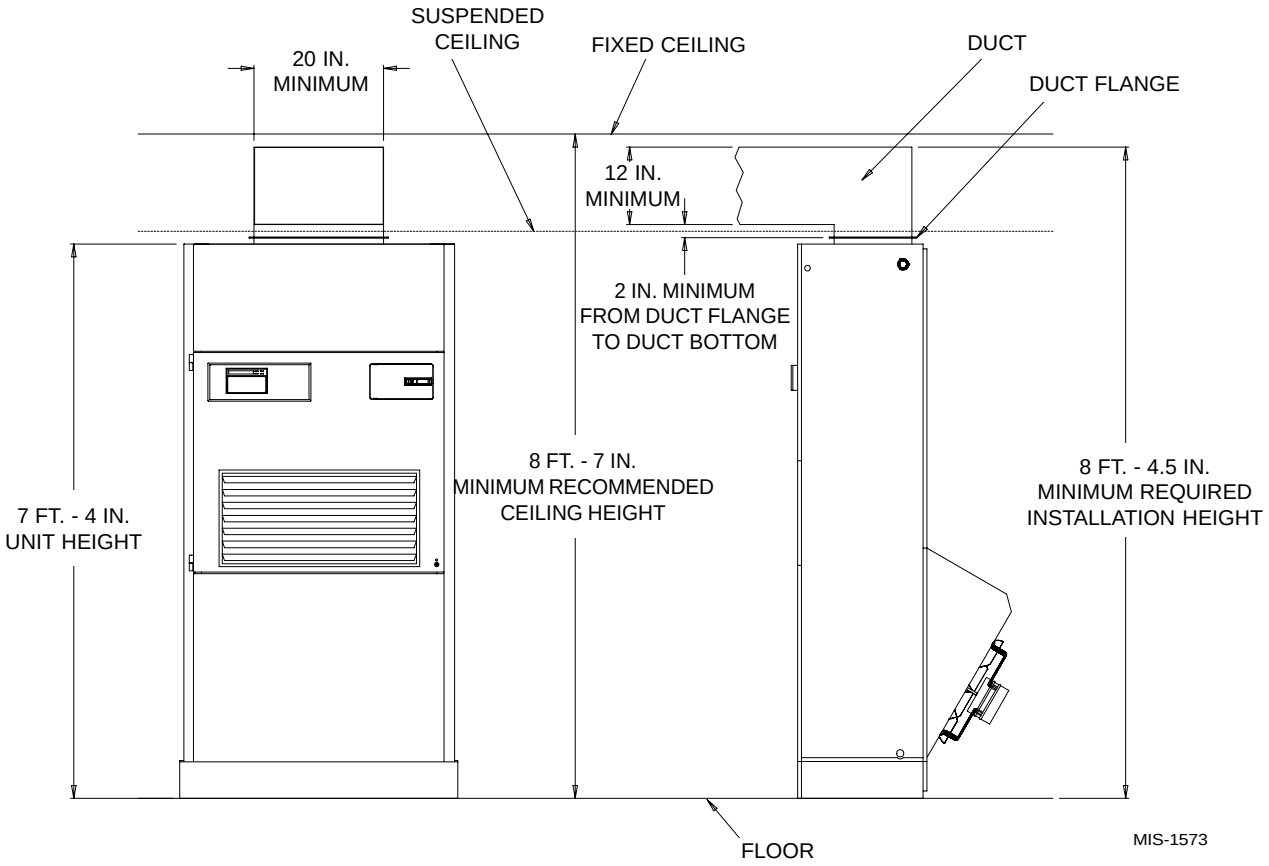

DUCT WORK

Any heat pump is more critical of proper operating charge and an adequate duct system than a straight air conditioning unit. All duct work must be properly sized for the design air flow requirement of the equipment. Air Conditioning Contractors of America (ACCA) is an excellent guide to proper sizing. All duct work or portions thereof not in the conditioned space should be properly insulated in order to both conserve energy and prevent condensation or moisture damage. When duct runs through unheated spaces, it should be insulated with a minimum of one inch of insulation. Use insulation with a vapor barrier on the outside of the insulation. Flexible joints should be used to connect the duct work to the equipment in order to keep the noise transmission to a minimum.

The QTEC series heat pump has provision to attach a supply air duct to the top of the unit. Duct connection size is 12 inches x 20 inches. The duct work is field supplied and must be attached in a manner to allow for ease of removal when it becomes necessary to slide the unit out from the wall for service. See Figure 7 for suggested attachment method.

FIGURE 7
SUPPLY DUCT CONNECTIONS

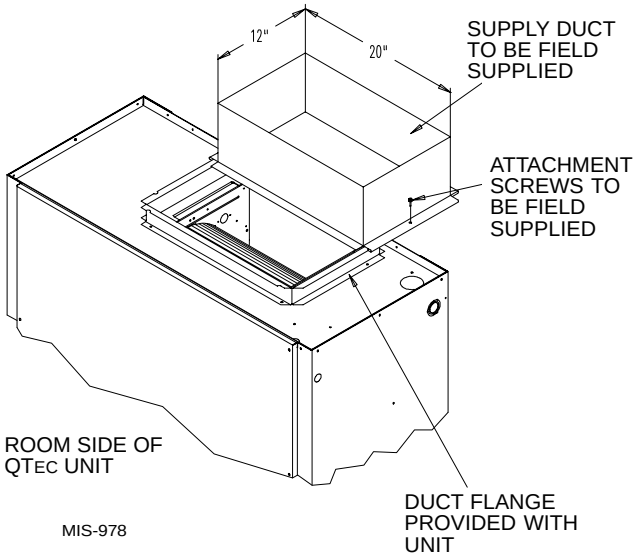

NOTE: Unit cabinet, supply air duct and free blow plenum are approved for "0" clearance to combustible material.

The QTEC series heat pumps are designed for use with free return (non-ducted) and either free blow with the use of QPB Plenum Box or a duct supply air system. For hot water coil options a QPBHW**-F for free blow or QPBHW**-D for ducted airflow is used.

The QPB and QPBHW Plenum Box mounts on top of the unit and has both vertically and horizontally adjustable louvers on the front discharge grille.

When used with a ducted supply, a QCX Cabinet Extension can be used to conceal the duct work above the unit to the ceiling. This extends 20" above the unit for a total height above the floor of 10'-7/8". The unit is equipped with a variable speed indoor blower motor which increases in speed with an increase in duct static pressure. The unit will therefore deliver proper rated air flow up to the maximum ESP shown in Table 8. However, for quiet operation of the air system, the duct static should be kept as low as practical, within the guidelines of good duct design.

FILTERS

Two 1 inch throw away filters [(1) 16x16 and (1) 16x20] are supplied with each unit. The filters slide into filter brackets. Refer to Figure 8.

The filters are serviced from the inside of the building by opening the hinged door. This door is attached by 1/4 turn fasteners and one locking latch.

The internal filter brackets are adjustable to accommodate 2 inch filters. The tabs for the 1 inch filters must be bent down to allow the 2 inch filters to slide in place.

FIGURE 8
FILTER LOCATION

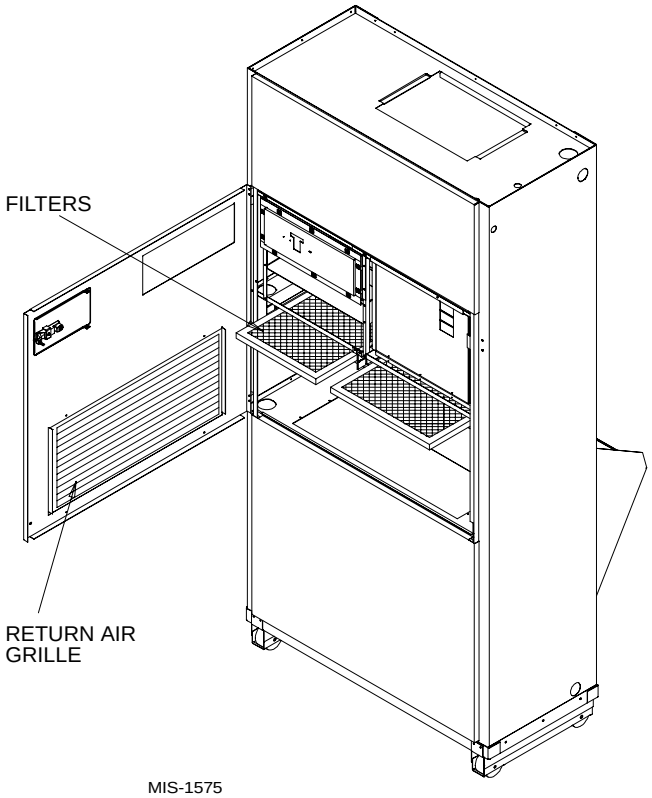

FRESH AIR INTAKE

This unit is equipped with a fresh air damper assembly. The damper blade is locked in the closed position when the unit is shipped from the Factory. To allow the damper to operate remove the two plastic locking pins, one on each end of the blade. This will allow for maximum fresh air flow. The Damper blade will now open when the indoor blower is operating. If less than maximum fresh air flow is required, reinsert the plastic pins to limit damper blade opening to desired level. Two extra pins are provided (taped to the inside of the assembly) which may be used to hold the blade in some position other than minimum or maximum position. This fresh air assembly is located in the rear of the unit and to gain access to make these adjustments remove the air filter service door.

All capacity, efficiency and cost of operation information as required for Department of Energy "Energyguide" Fact Sheets are based upon the fresh air blank-off plate in place and is recommended for maximum energy efficiency.

The blank-off plate is available upon request from the factory and is installed in place of the fresh air damper shipped with each unit.

For details on energy recovery ventilation see separate section.

CONDENSATE DRAIN

There are two drain connections on the unit. The rear drain is the primary drain, and is located on the right lower rear panel of the unit. The optional side drain is located on the bottom right side of the unit. The side drain is shipped with a plug installed.

The ***side drain*** requires a water trap for proper drainage. See Figure 9. The drain can be routed through the floor or through the wall. ***If the drain is to be routed through an unconditioned space, it must be protected from freezing.*** The drain line must be able to be removed from the unit if it is necessary to remove the unit from the wall.

The ***rear drain*** can be used with wall thickness of up to 10 inches where a water trap can be installed between the unit and the interior wall. See Figure 10. The trap cannot extend beyond the edge of the unit or it will interfere with the wall mounting bracket. When the rear drain is used, the plug must be removed and installed in the side drain. The drain can be routed through the floor or through the wall. If the drain is routed through the wall, the drain line must be positioned such that it will not interfere with the sleeve flange or the grille. See Figure 11. ***If the drain is to be routed through an unconditioned space, it must be protected from freezing.***

Optional rear drain kits, both standard and heated versions, are available to facilitate easy installation, and also removability of heat pump for service.

FIGURE 9
SIDE DRAIN (SIDE VIEW)

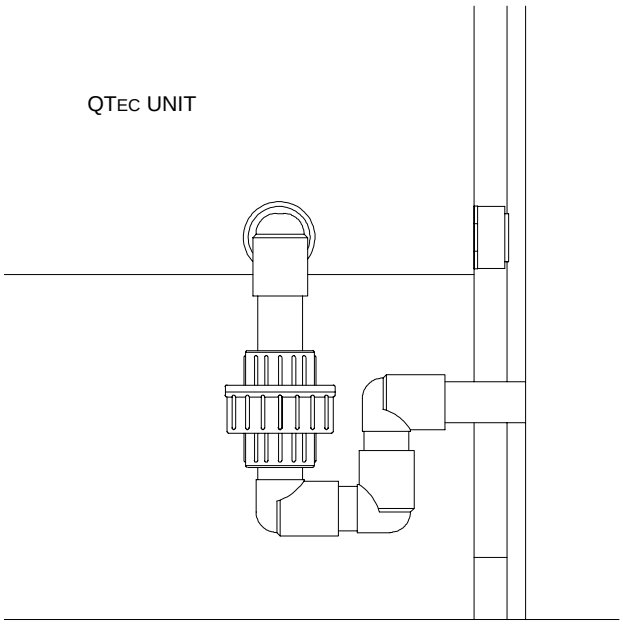

MIS-976

FIGURE 10
OPTIONAL REAR DRAIN

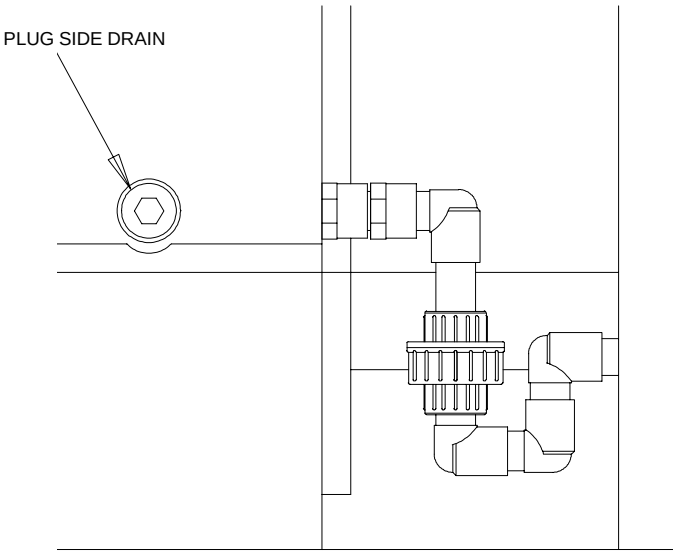

MIS-975

FIGURE 11
REAR DRAIN (TOP VIEW)

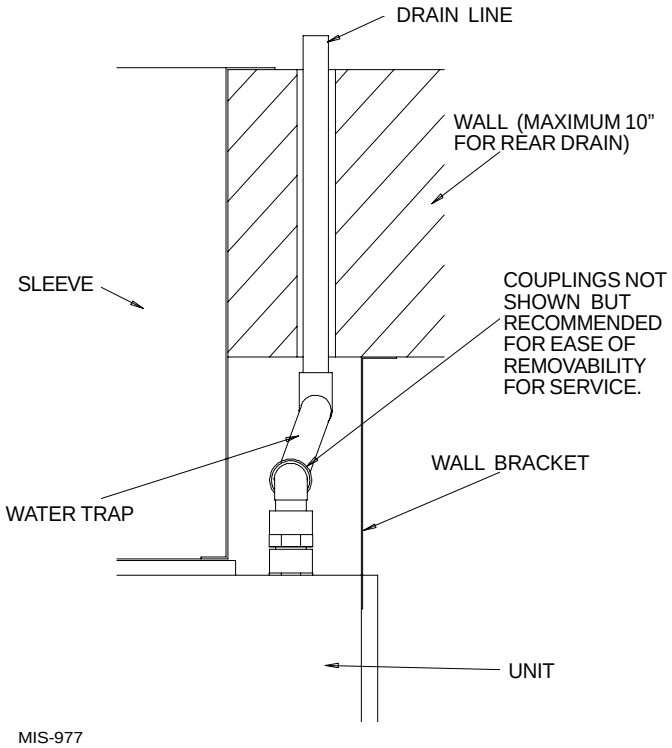

SERVICE LIGHT

The unit is equipped with a service light which signals the user that service is required. The light is located in the upper control panel and is visible only when the hinged service/filter access door is open.

The ***Service Unit*** light indicates that the unit has been shut off by a high or low pressure device. This indicates that the unit needs to be serviced.

FIGURE 12
UNIT MOUNTING

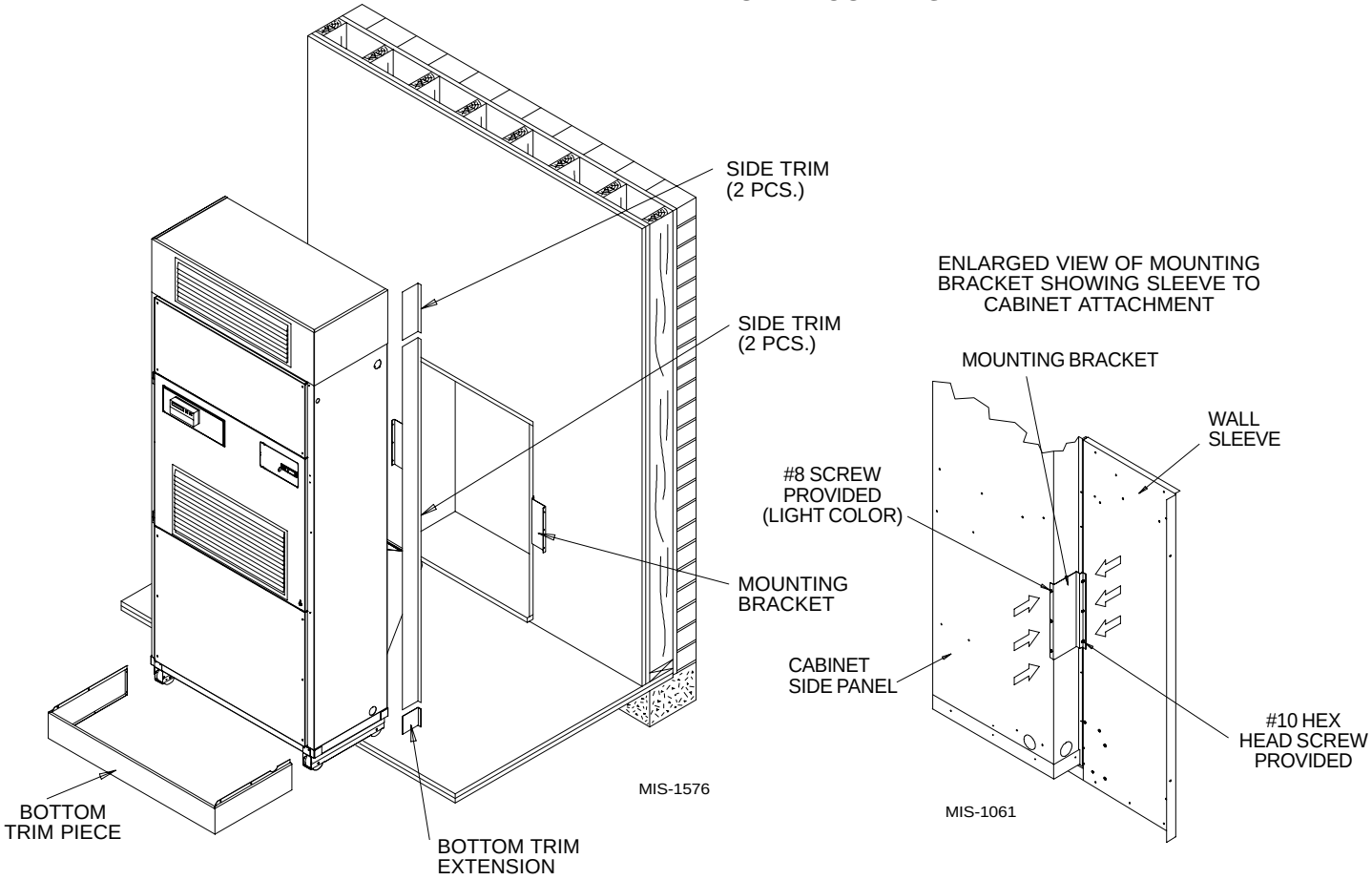

MOUNTING THE UNIT

When installing a QTEC unit near an interior wall on the left side, a minimum of 8 inches is required; 12 inches is preferred.

When installing a QTEC unit near an interior wall on the right side, a minimum of 18 inches is required as additional space is required to connect the side drain. If the rear condensate drain kit QCDS48 is used the minimum can be reduced to 8 inches.

This clearance is required to allow for the attachment of the unit to the sleeve and side trim pieces to the wall.

This unit is to be secured to the wall sleeve with mounting brackets provided. The unit itself, the supply duct and the free blow plenum are suitable of "0" clearance to combustible material.

Following are the steps for mounting the QTEC, for reference see Figure 12 (page 11).

1. Attach mounting brackets to the wall sleeve with screws provided.
2. Position the unit in front of the sleeve with the condenser section toward the sleeve.
3. Remove the locking screws from the wheels. Refer to Figure 13.
4. Roll the unit into the sleeve. Make sure to check both sides of the unit as it is being rolled to keep it centered in the sleeve. Also check the alignment to the mounting brackets. This unit must be level from side to side. If adjustments are necessary, shim up under the rollers with sheets of steel or any substance that is not affected by moisture.
5. Make sure the gasket on the rear of the unit is touching the sleeve across the top and down both sides. This is a rain water seal.
6. Secure the mounting brackets to the unit with screws provided, #10 hex head sheet metal screws.
7. Bottom trim extensions are provided for use when wall is less than 14 inches but greater than 10.5 inches. Secure to wall with screws (not provided).
8. Attach the bottom trim piece to the unit with the screws provided (dark colored).
9. Position side trim pieces to wall and attach with field supplied screws. There are two long pieces and two short pieces supplied. The long pieces are to enclose the gap behind the unit. The short pieces are to fill the gap behind the cabinet extension or the free blow plenum box. The may be cut to suit your ceiling height or overlap the unit side trim. There is sufficient length to trip up to a 10'2" ceiling.

NOTE: If the exterior wall thickness is between 5 inches to 10.5 inches, a side trim extension piece kit, model QSTX42, is available.

FIGURE 13
REMOVING LOCKING SCREWS FROM WHEELS

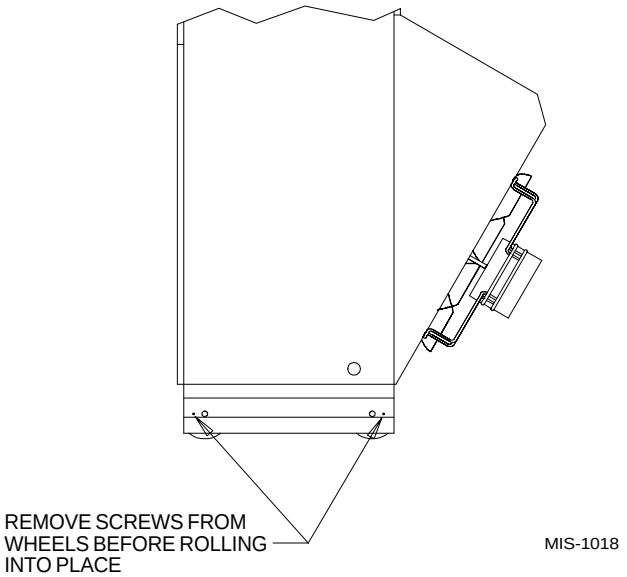

WIRING – MAIN POWER

Refer to the unit rating plate and/or Table 2 for wire sizing information and maximum fuse or "HACR Type" circuit breaker size. Each unit is marked with a "Minimum Circuit Ampacity". This means that the field wiring used must be sized to carry that amount of current. Depending on the installed KW of electric heat, there may be two field power circuits required. If this is the case, the unit serial plate will so indicate. All models are suitable only for connection with copper wire. Each unit and/or wiring diagram will be marked "Use Copper Conductors Only". These instructions ***MUST BE*** adhered to. Refer to the National Electrical Code (NEC) for complete current carrying capacity data on the various insulation grades of wiring material. All wiring must conform to NEC and all local codes.

The electrical data lists fuse and wire sizes (75° C copper) for all models, including the most commonly used heater sizes. Also shown are the number of field power circuits required for the various models with heaters.

The unit rating plate lists a "Maximum Time Delay Relay Fuse" or "HACR Type" circuit breaker that is to be used with the equipment. The correct size must be used for proper circuit protection, and also to assure that there will be no nuisance tripping due to the momentary high starting current of the compressor motor.

FIGURE 14
COMPONENT LOCATION

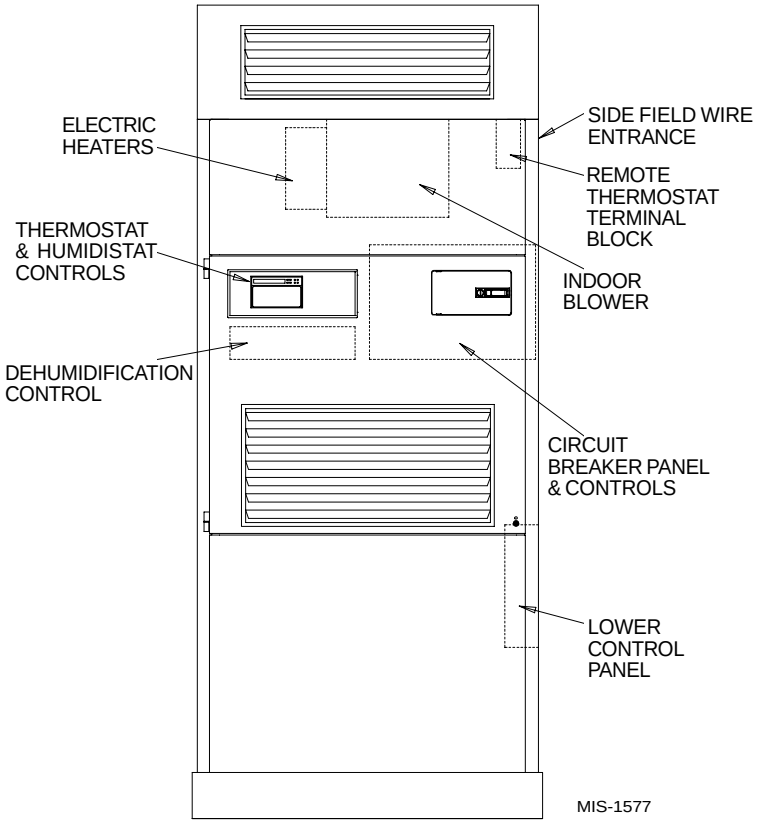

The disconnect access door on this unit may be locked to prevent unauthorized access to the disconnect.

See Start Up section for information on three phase scroll compressor start-ups.

The field wiring connections are located behind the top and hinged panel in the circuit breaker panel. See Figure 14.

WIRING – LOW VOLTAGE WIRING

230/208V, 1 PHASE AND 3 PHASE EQUIPMENT DUAL PRIMARY VOLTAGE TRANSFORMERS.

All Equipment leaves the factory wired on 240V tap. For 208V operation, reconnect form 240V to 208V tap. The acceptable operating voltage range for the 240 and 208V taps are as noted in Table 3.

TABLE 3
OPERATING VOLTAGE RANGE

TAP	RANGE
240 V	253 - 216
208 V	220 - 187
NOTE: The voltage should be measured at the field power connection point in the unit and while the unit is operating at full load (maximum amperage operating condition).	

The standard Climate Control ***Option X*** is a remote thermostat connection terminal block. See Figure 16 for wiring diagram. Compatible thermostats are listed in Table 4.

The Climate Control ***Option E*** is an electronic, programmable thermostat and a humidistat. The sub base of the thermostat and the humidistat are factory wired to the front panel of the unit. See Figure 16A for wiring diagram. Compatible for use with Energy Recovery Ventilator or Ventilator.

The Climate Control ***Option F*** is an electronic, non-programmable thermostat, timer and a humidistat. The sub base of the thermostat and the timer are factory wired to the front panel of the unit. See Figure 16B for wiring diagram. Compatible for use with Energy Recovery Ventilator or Ventilator.

The Climate Control ***Option G*** is an electronic, non-programmable thermostat and humidistat. The subbase of the thermostat is factory wired to the front panel of the unit. This option is compatible for use with the optional CS2000 Energy Control Monitor and a terminal block is provided for connection to the CS2000. See Figure 16C for wiring diagram. Compatible for use with Energy Recovery Ventilator or Ventilator.

NOTE: The CS2000 (or other field provided means to control ventilation) must be used if any of the mechanical (motorized) ventilation options are installed.

LOW VOLTAGE CONNECTIONS

These units use a grounded 24 volt AC low voltage circuit.

The *"R"* terminal is the *hot* terminal and the *"C"* terminal is *grounded.*

"G" terminal or pin 6 of P4 is the *fan input*.

"Y" terminal or pin 7 of P4 is the *compressor input*.

"B" terminal or pin 8 of P4 is the *reversing valve input*. The reversing valve must be energized for heating mode.

"R" terminal or pin 10 of P4 is *24 VAC hot*.

"C" terminal or pin 11 of P4 is *24 VAC grounded.*

"L" terminal or pin 12 of P4 is *compressor lockout* **output**. This terminal is activated on a high or low pressure trip by the electronic heat pump control. This is a 24 VAC output.

"W2" terminal or pin 9 of P4 is *second stage heat* (if equipped). If the unit is equipped with an optional hot water coil plenum box the water valve will be connected to this terminal.

"O1" terminal of pin 5 of P4 is the *ventilation input*. This terminal energizes any factory installed ventilation option.

"E" terminal or pin 3 of P4 is the *emergency heat input.* This terminal energizes the emergency heat relay.

NOTE: For total and proper control using DDC, a total of 7 controlled outputs are required (6 if no ventilation system is installed). For proper system operation under Emergency Heat conditions where the compressor needs to be deactivated, the B-W2-E outputs need to be energized. Removing the Y (compressor) signal alone turns the compressor off, but does not activate the additional circuitry embedded in the heat pump for proper and complete operation.

"5" terminal or pin 2 of P4 is the *24 dehumidification circuit.*

"4" terminal of pin 4 or P4 is the *dehumidification circuit.*. A contact ***must*** connect terminals 4 and 5.

"6" terminal of pin 1 of P4 is *VAC grounded to the humidistat*, if needed.

LOW VOLTAGE CONNECTIONS FOR DDC CONTROL

Fan Only	Energize G
Cooling Mode	Energize Y, G
Heat Pump Heating	Energize Y, G, B
2nd Stage Heating (if employed)	Energize G, W2
Ventilation	Energize G, O1
Dehumidification	Connect 4 and 5
Emergency Heat	Energize B, W2, E

TABLE 4
WALL THERMOSTATS AND SUBBASE COMBINATIONS

Thermostat	Subbase	Predominant Features
8403-018 (T874N1024)	8404-010 (Q6741261)	Automatic Heat/Cool (2) Changeover Position
8403-034 (1F94-80)	N/A	Programable Heat/Cool Electronic
8403-038 (H600A)	N/A	Humidistat
8403-042 (T8511G1070)	N/A	Manual/Auto/ Heat/Cool Non-Progammable Electronic

FIGURE 15

THERMOSTAT PLUG TERMINALS P2 AND P4 (VIEWED FROM PIN END)

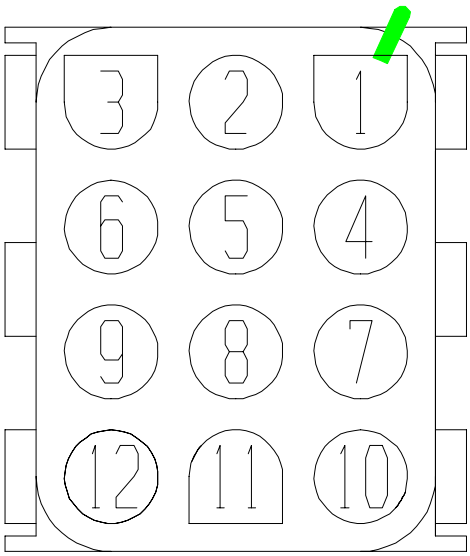

BLOWER MOTOR LOW VOLTAGE PLUG (VIEWED FROM PIN END)

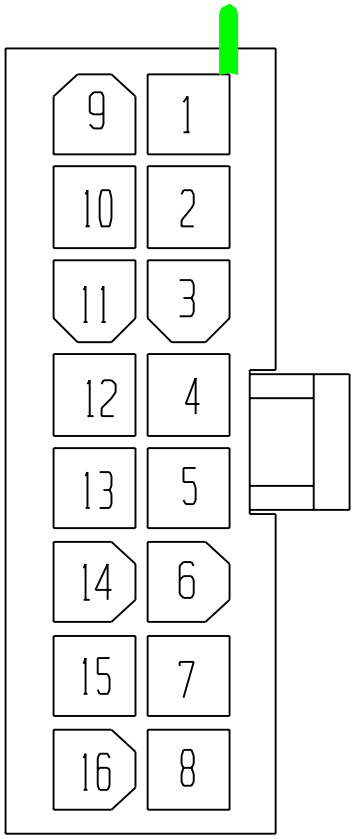

MIS-1285

FIGURE 16
THERMOSTAT WIRING DIAGRAM
"X" THERMOSTAT OPTION

DEHUMIDIFICATION MODULE

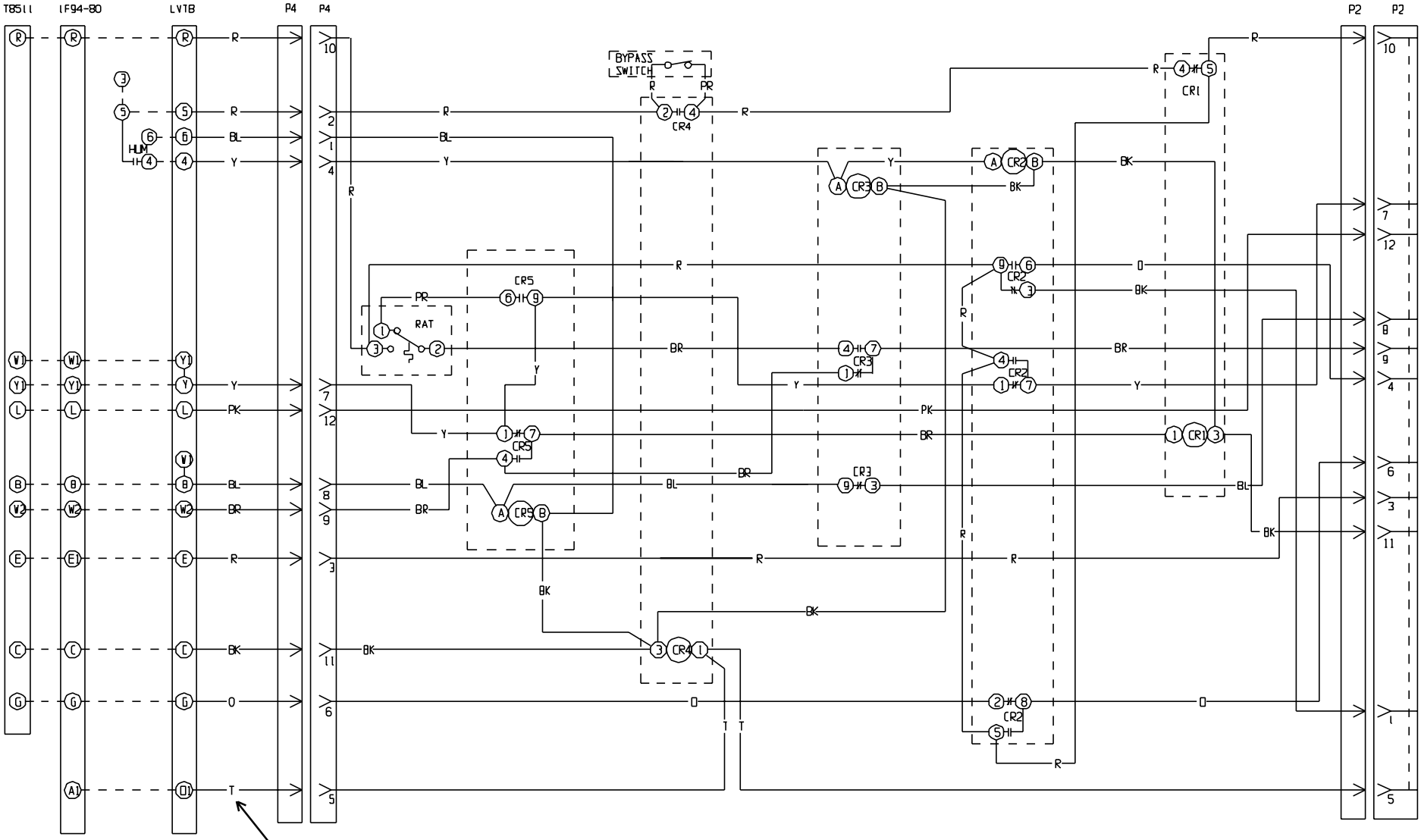

NOTE: See next page for additional details on LVTB connection identification.

4102-023

FIGURE 16-1
DETAILS OF LVTB CONNECTION

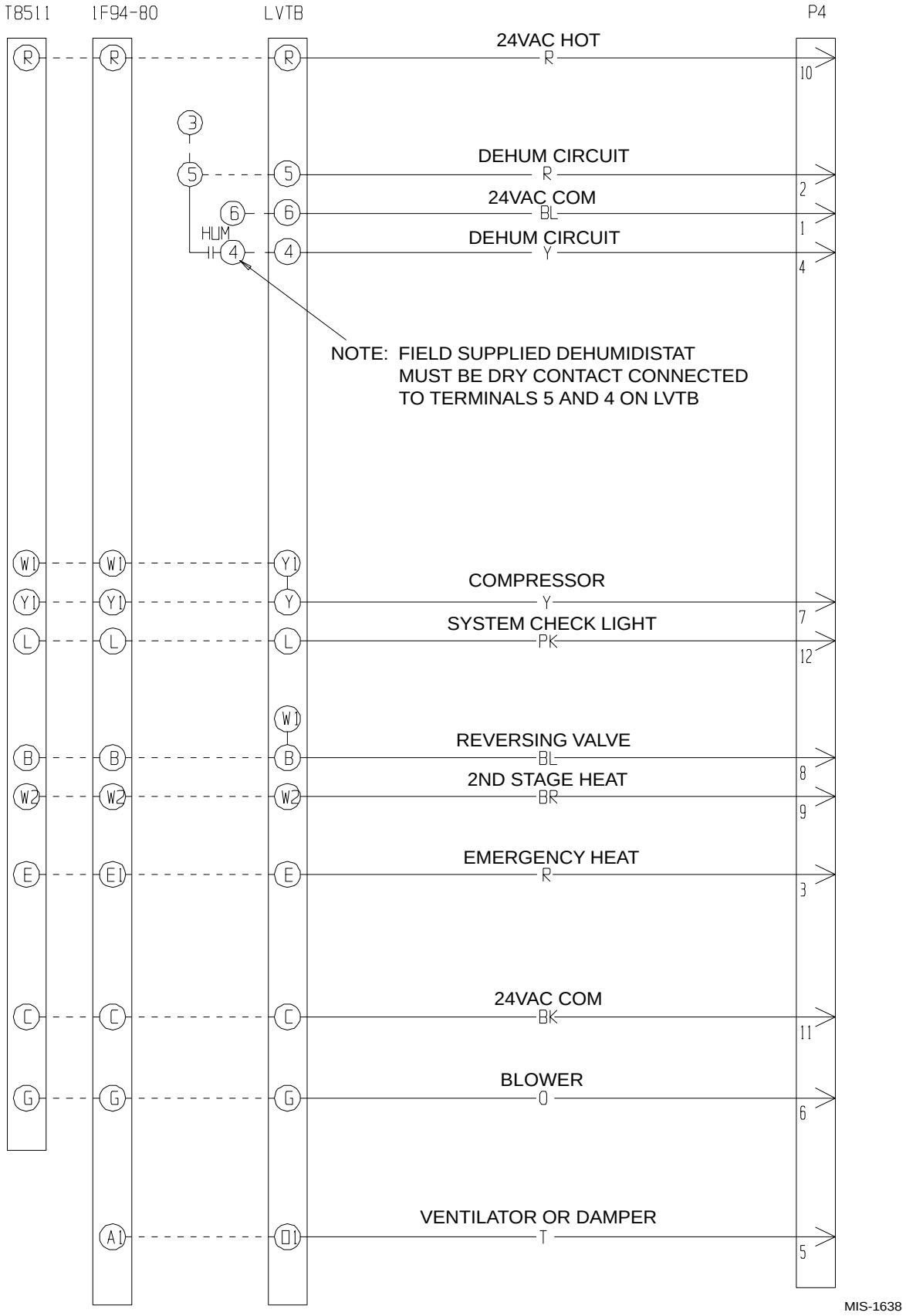

FIGURE 16A
REMOTE THERMOSTAT WIRING DIAGRAM
"E" THERMOSTAT OPTION

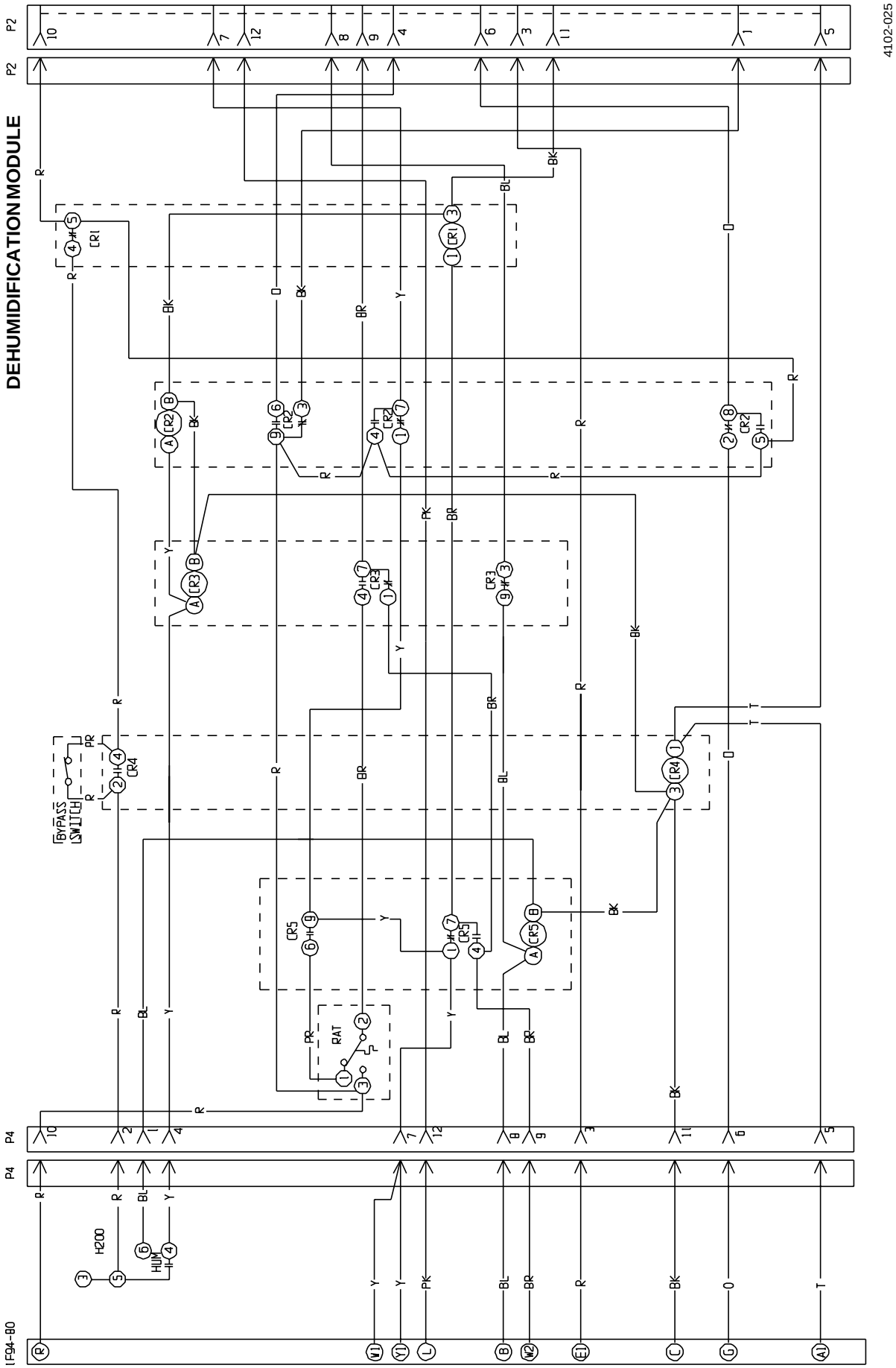

FIGURE 16B
REMOTE THERMOSTAT WIRING DIAGRAM
"F" THERMOSTAT OPTION

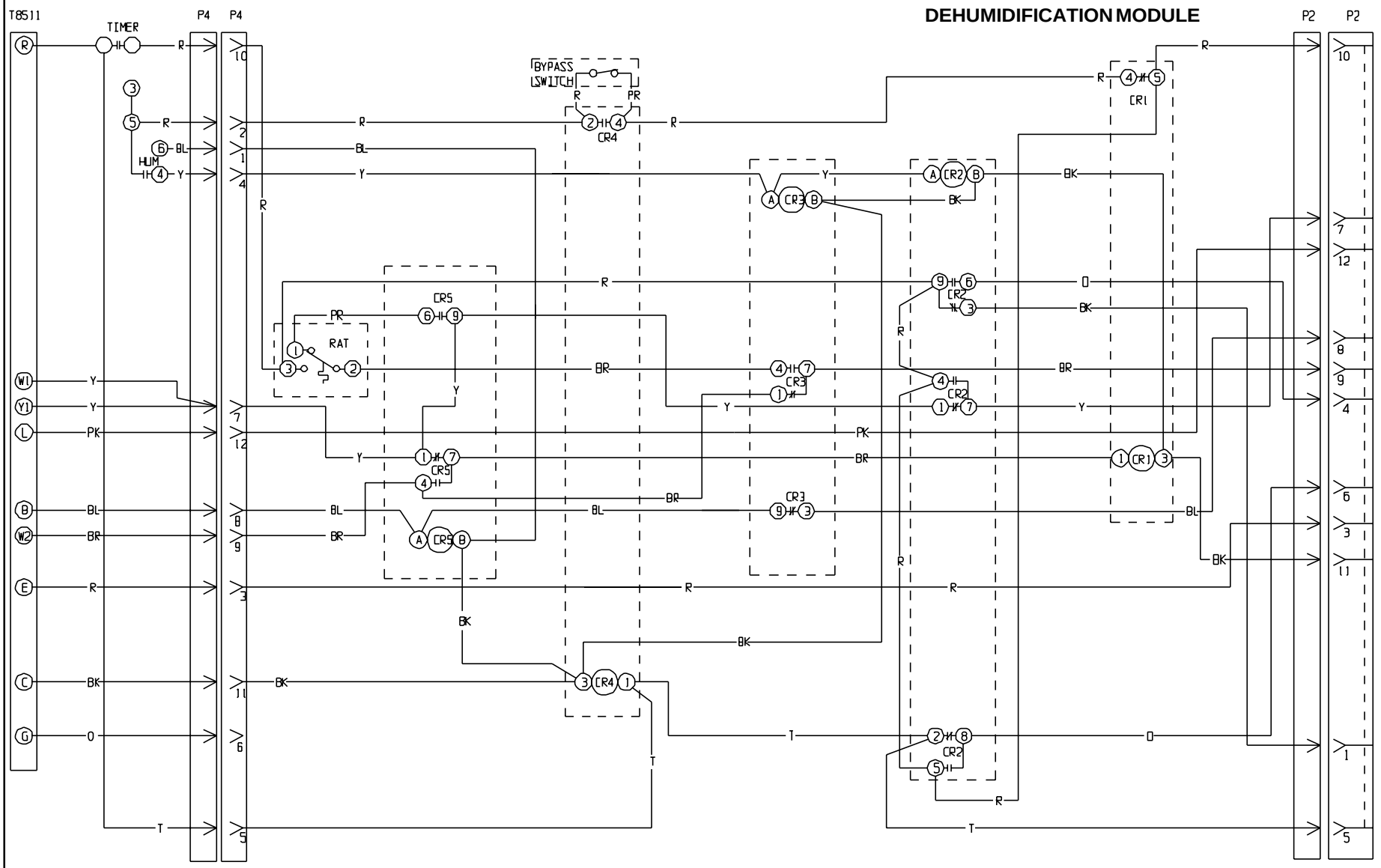

FIGURE 16C
UNIT MOUNTED THERMOSTAT AND HUMIDISTAT WIRING DIAGRAM
"G" THERMOSTAT OPTION

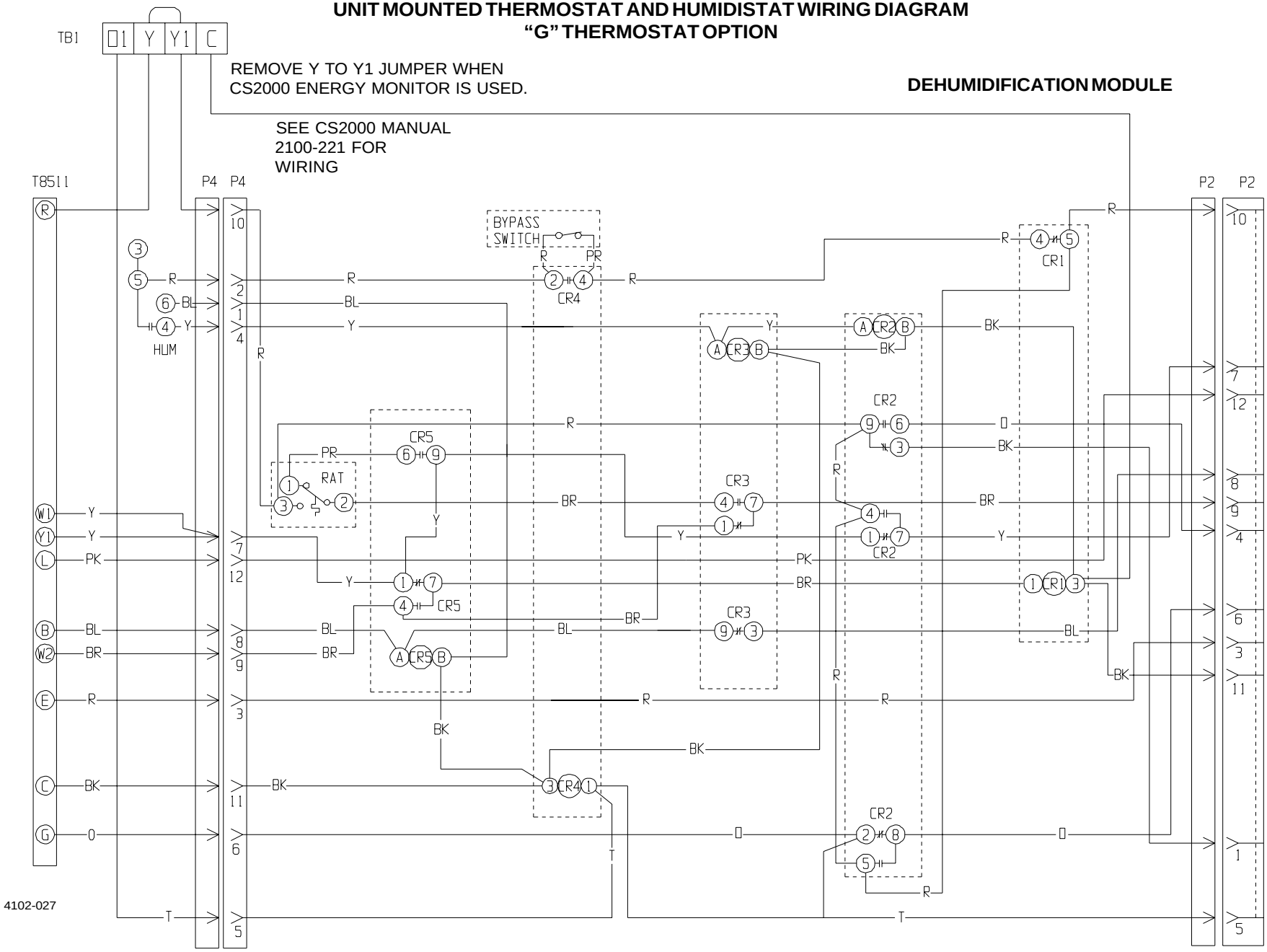

DESCRIPTION OF STANDARD EQUIPMENT

Solid State Electronic Heat Pump Control

Provides efficient 30 minute defrost cycle. A thermistor sensor and speed up terminal for service along with a 10 minute defrost override are standard on the electronic heat pump control.

High / Low Pressure Switch

Provides refrigerant circuit high pressure and loss of charge protection. Includes lockout circuit that is resettable from room thermostat.

Five Minute Compressor Time Delay

Provides short cycle protection for the compressor which extends compressor life. Built into the electronic heat pump control as standard.

Service Light

One service light indicates when service is required.

- Check System – detects high or low pressure switch operation for compressor protection.

OPTIONAL CFM (QH362, QH422, QH482 AND QH602 ONLY)

These units are shipped from the factory set to operate at the optional CFM level shown in Table 9. This provides lower operating sound levels for non-ducted, free discharge applications. This CFM level will reduce the system capacity performance by approximately 2% at the same energy efficiency.

Rated CFM is required for ducted applications for maximum performance rating. To obtain full CFM on these models, connect jumper wire as follows:

1. Disconnect all power to the unit. Failure to do so may result in damage to the motor.
2. Open Return Air access panel.
3. Open inner control panel cover.
4. Locate low voltage terminal strip. There is a pink jumper wire with both ends attached to terminal marked “G2”. Move one end of the jumper to terminal “Y”
5. Reverse steps to reassemble.

IMPORTANT INSTALLER NOTE

For improved start-up performance, wash the indoor coil with a dishwasher detergent.

PHASE MONITOR

All units with three phase scroll compressors are equipped with a 3 phase line monitor to prevent compressor damage due to phase reversal.

The phase monitor in this unit is equipped with two LEDs. If the Y signal is present at the phase monitor and phases are correct the green LED will light.

If phases are reversed, the red fault LED will be lit and compressor operation is inhibited.

If a fault condition occurs, reverse two of the supply leads to the unit. Do not reverse any of the unit factory wires as damage may occur.

THREE PHASE SCROLL COMPRESSOR START UP INFORMATION

Scroll compressors, like several other types of compressors, will only compress in one rotational direction. Direction of rotation is not an issue with single phase compressors since they will always start and run in the proper direction.

However, three phase compressors will rotate in either direction depending upon phasing of the power. Since there is a 50-50 chance of connecting power in such a way as to cause rotation in the reverse direction, ***verification of proper rotation must be made.*** Verification of proper rotation direction is made by observing that suction pressure drops and discharge pressure rises when the compressor is energized. Reverse rotation also results in an elevated sound level over that with correct rotation, as well as, substantially reduced current draw compared to tabulated values.

Verification of proper rotation must be made at the time the equipment is put into service. If improper rotation is corrected at this time there will be no negative impact on the durability of the compressor. However, reverse operation for oven one hour may have a negative impact on the bearing due to oil pump out.

All three phase scroll compressors used in the QTEC series are wired identically internally. As a result, once the correct phasing is determined for a specific system or installation, connecting properly phased power leads to the same Fusite terminal should maintain proper rotation direction. The direction of rotation of the motor may be changed by reversing any two line connections to the unit.

SERVICE HINTS

1. Caution user to maintain clean air filters at all times. Also, not to needlessly close off supply air registers. This may reduce air flow through the system, which shortens equipment service life as well as increasing operating costs and noise levels.
2. Switching to heating cycle at 75°F or higher outside temperature may cause a nuisance trip of the remote reset high pressure switch. Turn thermostat off, then on to reset the high pressure switch.
3. The heat pump wall thermostats perform multiple functions. Be sure that all function switches are correctly set for the desired operating mode before trying to diagnose any reported service problems.
4. Check all power fuses or circuit breakers to be sure they are the correct rating.
5. Periodic cleaning of the outdoor coil to permit full and unrestricted airflow circulation is essential.
6. Some service requires the need to remove the unit from the wall including replacement of the indoor coil and/or the outdoor coil. Also servicing the outdoor fan motor or fan blade will require removing the unit from the wall if the unit is installed at a height that is not easily accessible from the outside of the building.

   In order to remove the unit from the wall the following procedure must be used:

   a. Turn off power to the unit at the remote location. Some units may have more than one power supply.
   b. Disconnect field wiring at unit terminal block and remove from unit.
   c. Disconnect condensate drain.
   d. Remove the lower skirting around the unit.
   e. Remove wall mounting brackets from wall on each side of the unit.
   f. If unit is attached to duct work, remove upper cabinet extension by removing the top center screw only from the cabinet side panel.
   g. Remove screws that attach the duct work to the unit flanges.

   This unit is equipped with four rollers mounted to the base. For ease of pulling unit out from the wall, you may want to remove the bottom service door which requires removal of the return air panel, and grip the front flange of the base pan then pull straight out.

7. Annual maintenance is required to make sure that all of the systems are functioning properly.
   a. Check to make sure that the drains are not obstructed in any way.
   b. Remove any debris in the condenser section of the unit.
   c. Inspect and clean mist eliminator as described below.
   d. Inspect and wash outdoor coil as necessary.

MIST ELIMINATOR SERVICE

A mist eliminator is supplied with the wall sleeve. The mist eliminator is constructed of an aluminum frame and mesh. The mist eliminator is located in the top section of the wall sleeve and can be removed from the inside of the building without removing the unit from the wall. This requires that the ventilation package must be removed.

It is recommended that the mist eliminator be inspected annually and serviced as required. The mist eliminator can be inspected from the outside of the building by looking through the outdoor grille. The mist eliminator can be serviced from the outside by using a vacuum cleaner. The outdoor grille must be removed. Use the vacuum to remove dirt and debris from the surface of the mist eliminator. If additional cleaning is required, the mist eliminator will have to be removed from the sleeve.

The ventilation package will have to be removed to gain access tot he mist eliminator. If the blank off plate option is used, it is not necessary to service the mist eliminator. The steps necessary to remove each of the vent options are listed below.

The mist eliminator can be cleaned by washing with soap and water. The excess water should be shaken off the mist eliminator before it is reinstalled.

VENT OPTIONS

BAROMETRIC FRESH AIR DAMPER (Standard)

Before starting, make sure the power has been turned off. The return air grille panel must be removed. The fresh air damper assembly can be seen on the back of the unit. See Figure 17.

1. The fresh air damper is attached to the back of the unit with one screw on either side of the assembly. Both of the screws must be removed.
2. Once the mounting screws are removed, tilt the assembly down and lift it out.

The mist eliminator can be seen through the opening. The mist eliminator must be raised up and the bottom can be pulled toward the front of the unit.

COMMERCIAL ROOM VENTILATOR (Option)

Before starting, make sure the power has been turned off. The return air grille panel must be removed. The commercial room ventilator (CRV) can be seen after the panel has been removed. The CRV must be remove to gain access to the mist eliminator.

1. The two mounting screws in the front of the CRV must be removed.
2. The power connectors for the CRV (located on the right side of the unit) must be disconnected. Squeeze the tabs on the sides of the connector and pull straight out. Unplug both of the connectors.
3. Slide the CRV straight out of the unit.

The mist eliminator can be seen through the opening in the back of the unit. The mist eliminator must be raised up and the bottom can be pulled toward the front of the unit and removed.

QTEC R ENERGY RECOVERY VENTILATOR (Option)

Before starting, make sure that the power has been turned off. The return air grille panel must be removed. The energy recovery ventilator (QERV) can be seen after the panel has been removed. To gain access to the mist eliminator, the QERV must be removed. See Figure 18.

1. The front fill plate of the QERV must be removed. There is one screw on either side of the plate. Remove these screws and remove the plate.
2. On either side of the QERV there are mounting screws that hold the QERV in place. Remove both of these screws.
3. Underneath the heat recovery cassette there is a power connector for the lower blower assembly. To disconnect this plug, the tabs on both sides of the plug must be squeezed to release the plug. While squeezing the tabs, pull the plug out of the socket.
4. The QERV is plugged into the unit in the right side of the unit. Both of these plugs must be disconnected to remove the QERV. Squeeze the tabs on the sides of the connector and pull straight out.
5. Slide the QERV assembly straight out of the unit, being careful not to let the cassette slide out of the QERV.

The mist eliminator can be seen through the opening in the back of the unit. The mist eliminator must be raised up and the bottom can be pulled toward the front of the unit and removed.

FIGURE 17
FRESH AIR DAMPER REMOVAL

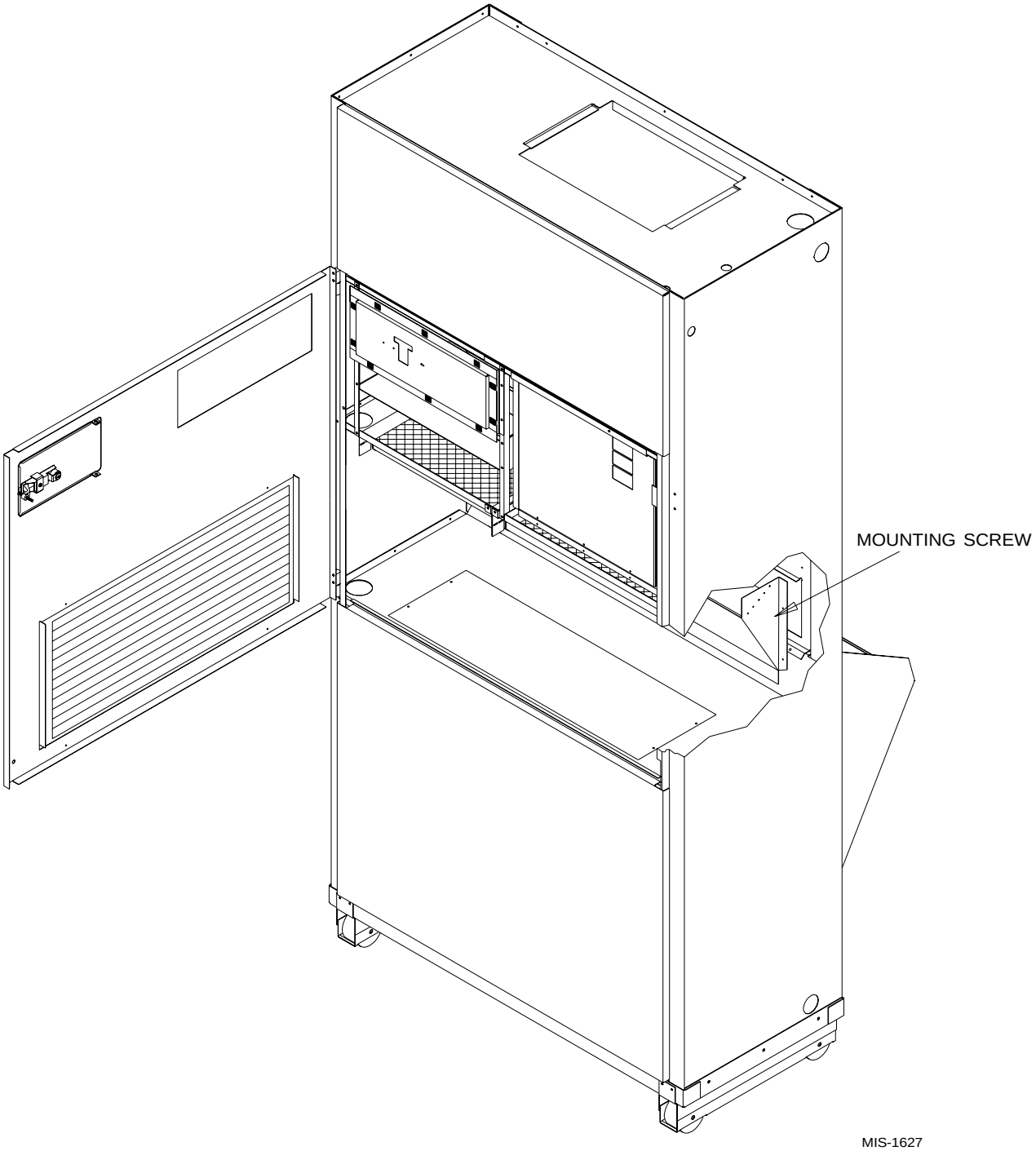

FIGURE 18
QERV REMOVAL

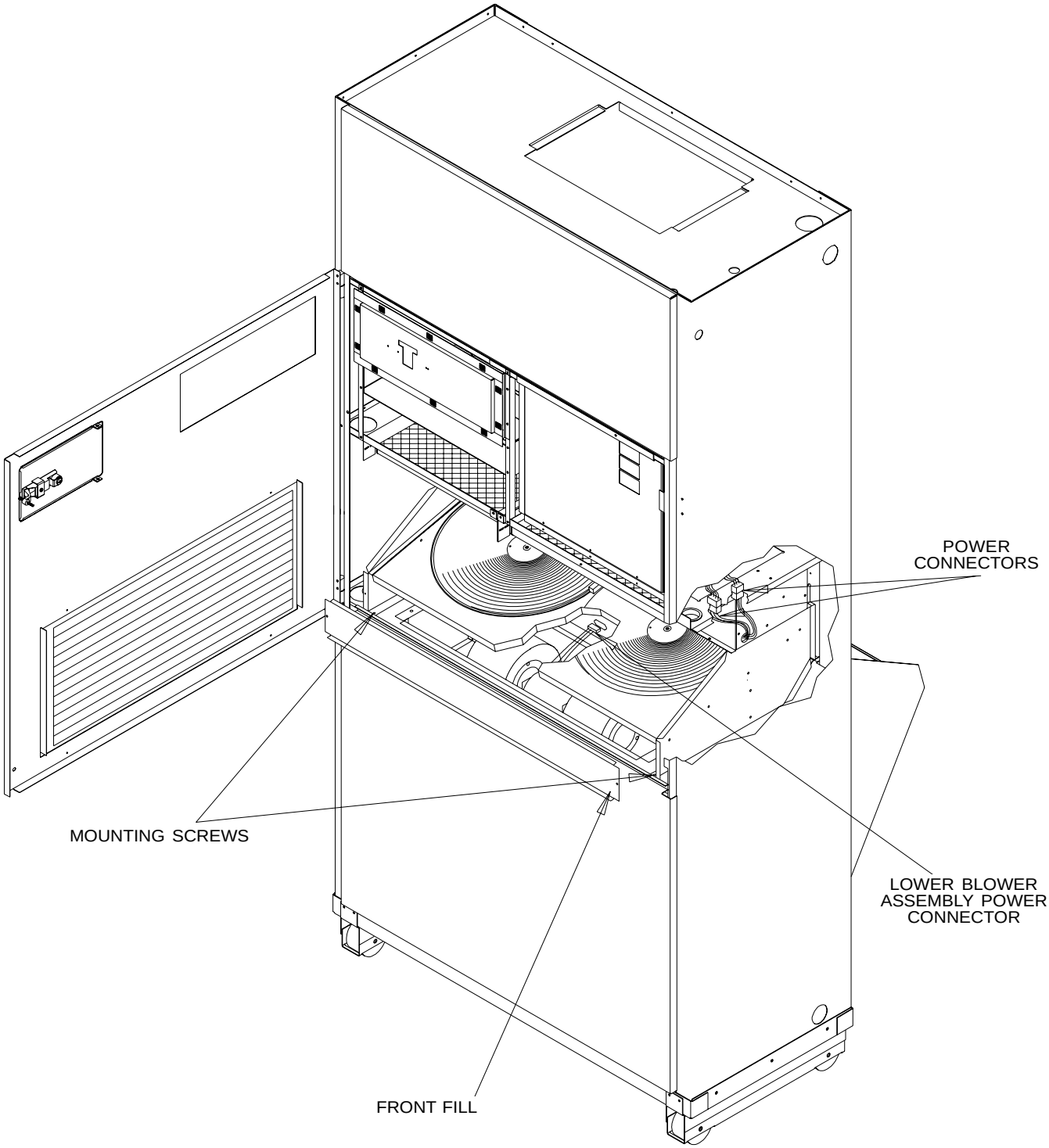

SEQUENCE OF OPERATION

Cooling – Circuit R-Y makes the thermostat pull in the compressor contactor starting the compressor and outdoor motor. The G (indoor motor) circuit is automatically completed on any call for cooling operation, or can be energized by manual fan switch on subbase for constant air circulation.

Heating – A 24V solenoid coil on reversing valve controls heating cycle operation. Two thermostat options, one allowing "Auto" change over from cycle to cycle and the other constantly energizing solenoid coil during heating season and thus eliminating pressure equalization noise except during defrost, are to be used on "Auto" option, a circuit is completed for R-W1 and R-Y on each heating "on" cycle, energizing reversing valve solenoid and pulling in compressor contactor starting compressor and outdoor motor. R-G also makes starting indoor blower motor. Heat pump heating cycle now in operation.

The second option has no "Auto" change over position, but instead energizes the reversing valve solenoid constantly whenever the system switch on subbase is placed in "Heat" position, the "B" terminal being constantly energized from R. A thermostat demand for heat completes R-Y circuit, pulling in compressor contactor starting compressor and outdoor motor. R-G also make starting indoor blower motor.

Reheat Circuit There is a small capillary tube inserted between the reheat coil return line and suction line that will prevent liquid from accumulating in the reheat coil when it is inactive. This drain does not affect the normal operation of the system.

There is a check valve located in the reheat coil return line. It has a soft spring to hold the ball on the seat. This will make the method of checking the ball freedom with a magnet difficult. Refer to Figures 18 and 19 for the location of the check valve and drain back capillary.

When the system is operating in the dehumidification mode the suction pressure will be reduced by 4 to 8 psig and the discharge pressure will be reduced by 19 to 22 psig.

Freeze Thermostat If the freeze thermostat senses a 32° evaporator temperature the compressor will be shut off. The blower will continue to run until the coil is defrosted and then the compressor will start again.

Return Air Thermostat In dehumidification mode if the return air temperature is lower than 65°, the return air thermostat closes and brings on stage one electric heat to maintain 65°.

High / Low Pressure control provides protection for the compressor. In the event system pressures go above 350 PSI or below 3.5 PSI in either cooling or heating mode the compressor will be stopped. This will activate the red light located in the control panel. The lockout circuit will hold compressor off line. When the system problem is corrected, the unit operation can be restored by turning of the main power supply off and then back on, or reset the room thermostat. The low pressure control has a bypass to eliminate nuisance lockout on cold start up.

OPTIONAL CLIMATE CONTROLS SEQUENCE OF OPERATION

The Climate Control ***Option E*** is an electronic, programmable thermostat and a humidistat. This unit has a refrigerant reheat circuit that is controlled by a 3 way valve.

When the humidity is above the setpoint of the humidistat, the compressor circuit and the 3 way valve are energized and the evaporator air flow is reduced. The 3 way valve directs hot discharge gas into a separate desuperheating condenser circuit that reheats the conditioned air before it is delivered to the room. When the humidistat is satisfied, the system switches back to normal air conditioning mode.

If the thermostat calls for cooling during dehumidification mode, the call for cooling takes precedence over the dehumidification and the unit will cool until the thermostat is satisfied. Once the call for cooling is satisfied, the unit may continue to dehumidify.

If the thermostat calls for heat when the unit is in the dehumidification mode, the electric heaters will energize and the evaporator air flow will return to the heating air flow. When the thermostat is satisfied, the electric heaters will turn off and the air flow will be reduced and the system will continue to dehumidify until humidistat is satisfied.

If the unit is running in heat pump mode and the humidistat calls for dehumidification, the dehumidification mode takes precedence over the heat pump heating mode. The unit will not return to the heating mode until 2nd stage heating is called for.

The Climate Control ***Option F*** has a non-programmable electronic thermostat, timer, and humidistat. This unit has a refrigerant reheat circuit that is controlled by a 3 way valve.

Unit operation is controlled by the manually operated timer. Normal heating, cooling or ventilation is available only when the timer is on. Dehumidification can be set to be available only when the timer is on, or to be available continuously by switching a toggle switch.

When the humidity is above the setpoint of the humidistat, the compressor circuit and the 3 way valve are energized and the evaporator air flow is reduced. The 3 way valve directs hot discharge gas into a separate desuperheating condenser circuit that reheats the conditioned air before it is delivered to the room. If the return air thermostat sensed a temperature below 65° during dehumidification, the fist stage electric heaters are brought on to raise the return air temperature above 65°. When the humidistat is satisfied, the system switches back to normal air conditioning mode.

If the thermostat calls for cooling during dehumidification mode, the call for cooling takes precedence over the dehumidification and the unit will cool until the thermostat is satisfied. Once the call for cooling is satisfied, the unit may continue to dehumidify.

If the thermostat calls for heat when the unit is in the dehumidification mode, the electric heaters will energize and the evaporator air flow will return to the heating air flow. When the thermostat is satisfied, the electric heaters will turn off and the air flow will be reduced and the system will continue to dehumidify until humidistat is satisfied.

If the unit is running in heat pump mode and the humidistat calls for dehumidification, the dehumidification mode takes precedence over the heat pump heating mode. The unit will not return to the heating mode until 2nd stage heating is called for.

The Climate Control ***Option G*** has a non-programmable electronic thermostat, humidistat and is compatible for use with a CS2000 Energy Control Monitor. This unit has a refrigerant reheat circuit that is controlled by a three-way valve.

Unit operation is controlled by the thermostat and humidistat, and optional CS2000 Energy Monitor Controller can be easily integrated by simple connection to the low voltage terminal block provided. See Figure 16C.

NOTE: The CS2000 (or other means for ventilation control) must be used if any mechanical (motorized) ventilation options are installed.

Dehumidification can be set to be available only when CS2000 is active or to be available continuously by switching a toggle switch at the control panel.

When the humidity is above the setpoint of the humidistat, the compressor circuit and the 3 way valve are energized and the evaporator air flow is reduced. The 3 way valve directs hot discharge gas into a separate desuperheating condenser circuit that reheats the conditioned air before it is delivered to the room. If the return air thermostat sensed a temperature below 65° during dehumidification, the fist stage electric heaters are brought on to raise the return air temperature above 65°. When the humidistat is satisfied, the system switches back to normal air conditioning mode.

If the thermostat calls for cooling during dehumidification mode, the call for cooling takes precedence over the dehumidification and the unit will cool until the thermostat is satisfied. Once the call for cooling is satisfied, the unit may continue to dehumidify.

If the thermostat calls for heat when the unit is in the dehumidification mode, the electric heaters will energize and the evaporator air flow will return to the heating air flow. When the thermostat is satisfied, the electric heaters will turn off and the air flow will be reduced and the system will continue to dehumidify until humidistat is satisfied.

If the unit is running in heat pump mode and the humidistat calls for dehumidification, the dehumidification mode takes precedence over the heat pump heating mode. The unit will not return to the heating mode until 2nd stage heating is called for.

REFRIGERANT TUBE SCHEMATIC FOR REHEAT COIL

Figure 19 shows the refrigerant gas flow through the reheat coil during the dehumidification mode.

When the unit is in standard cooling (Figure 20) or heating mode the reheat coil is inactive.

PRESSURE SERVICE PORTS

High and low pressure service ports are installed on all units so that the system operating pressures can be observed. Pressure curves can be found later in the manual covering all models on both cooling and heating cycles. It is imperative to match the correct pressure curve to the unit by model number. Upper and lower service doors must be attached to obtain proper reading.

FIGURE 19
QTEC DEHUMIDIFICATION MODE CIRCUIT DIAGRAM

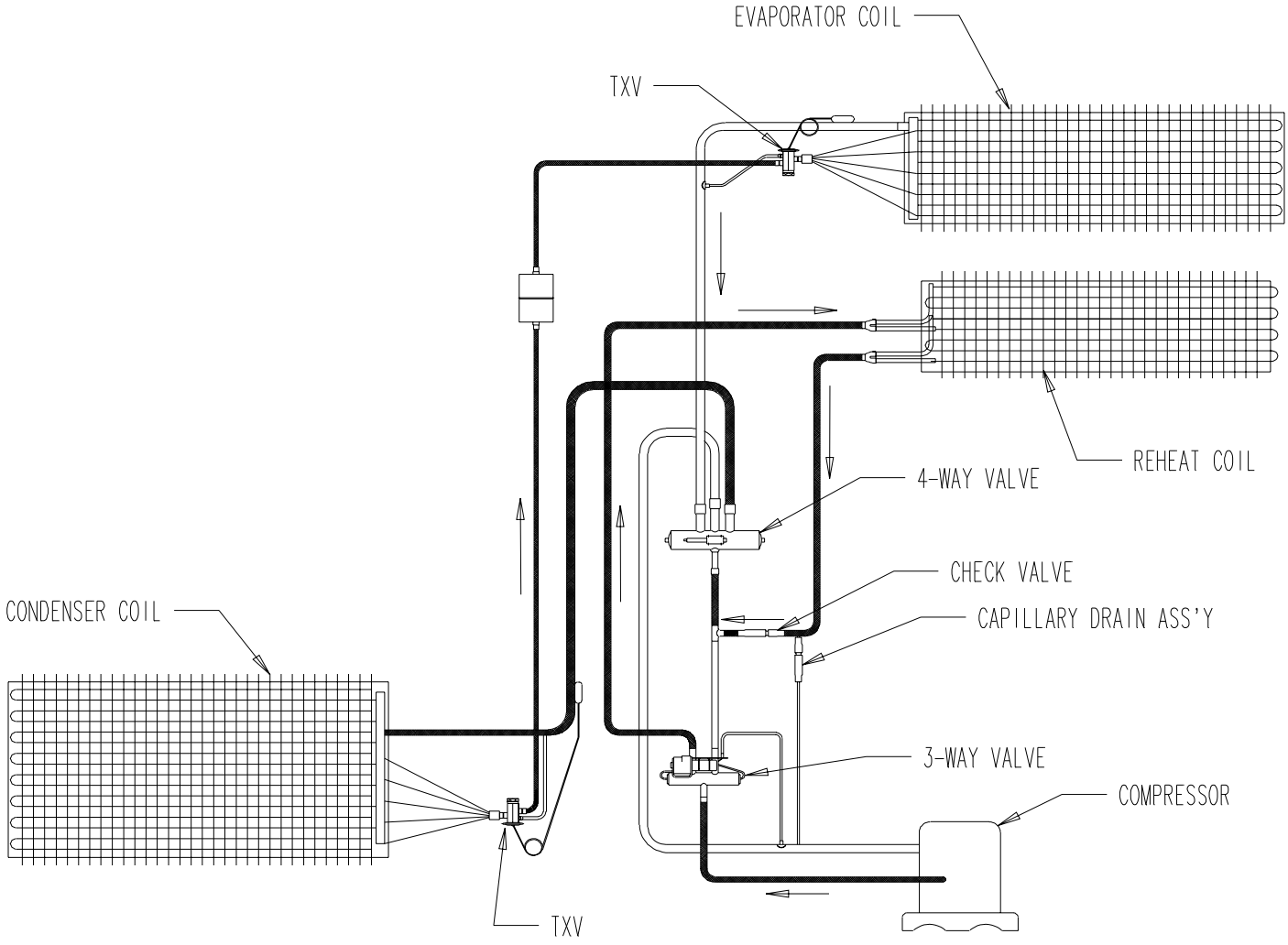

MIS-1088

FIGURE 20
QTEC COOLING MODE CIRCUIT DIAGRAM

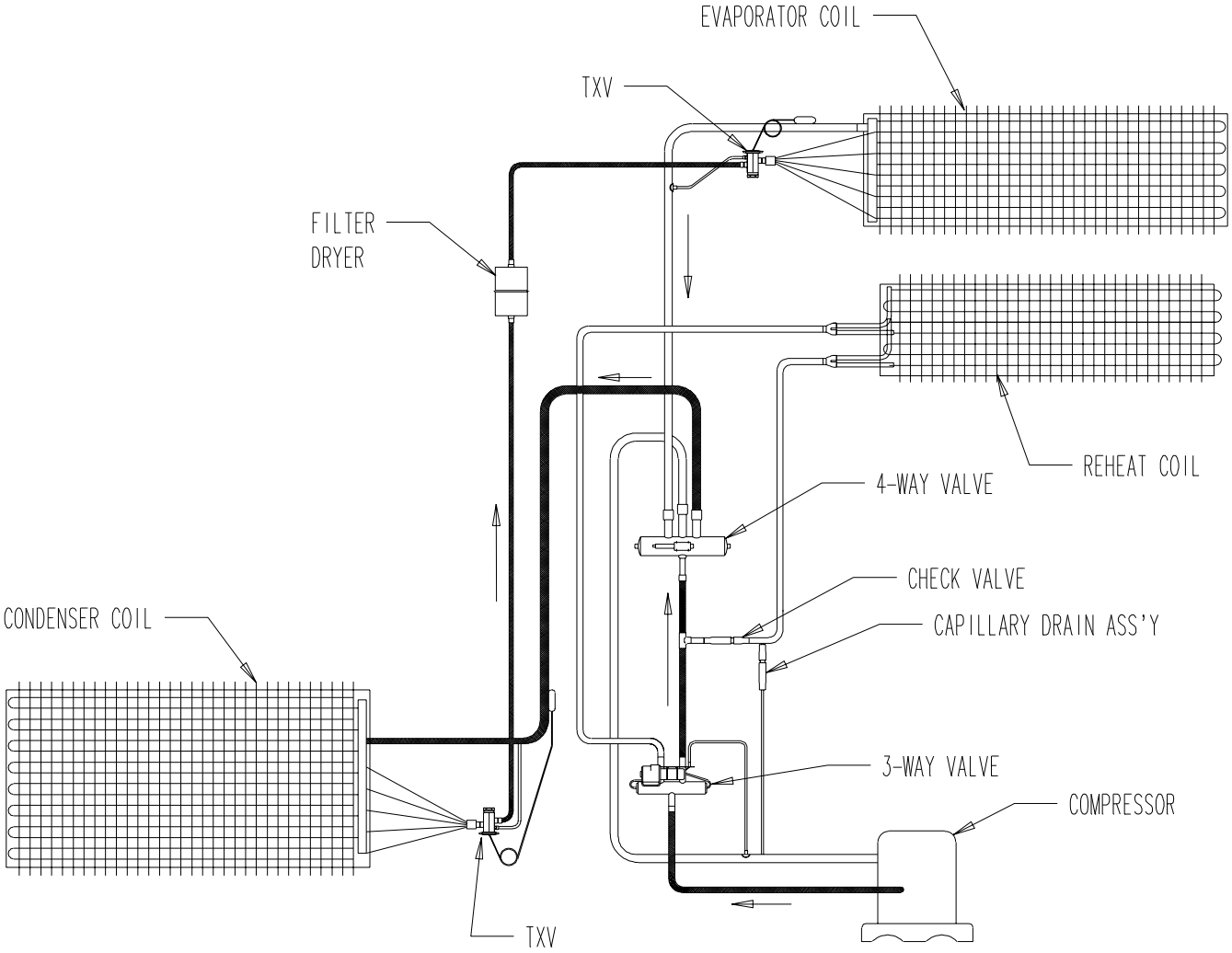

MIS-1089

FIGURE 21
HEAT PUMP CONTROL BOARD (HPC)

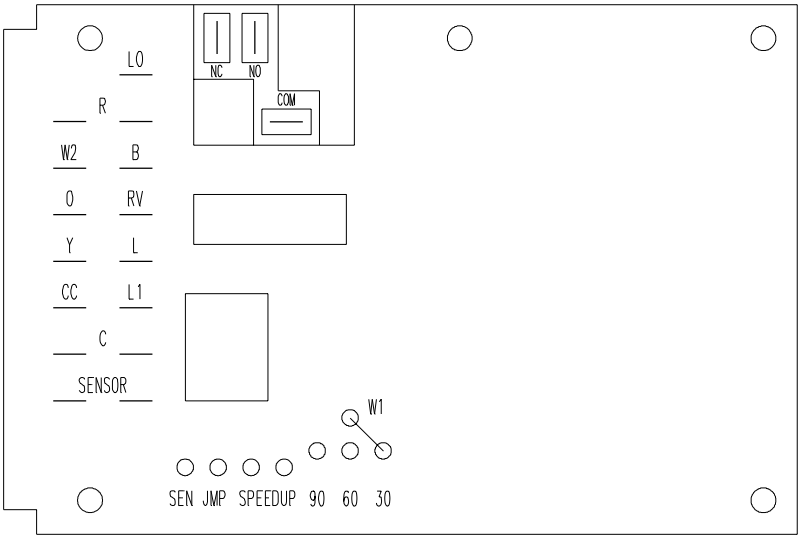

MIS-973

DEFROST CYCLE

The defrost cycle is controlled by temperature and time on the solid state heat pump control. (See Figure 21.)

When the outdoor temperature is in the lower 40° F temperature range or colder, the outdoor coil temperature is 32° F or below. This coil temperature is sensed by the coil sensor mounted near the bottom of the outdoor coil. Once coil temperature reaches 30° F or below, the coil sends a signal to the control logic of the heat pump control and the defrost timer will start.

After 30 minutes at 30° F or below, the heat pump control will place the system in the defrost mode.

During the defrost mode the refrigerant cycle switches back to the cooling cycle, the outdoor motor stops, electric heaters are energized, and hot gas passing through the outdoor coil melts any accumulated frost. When the temperature rises to approximately 57° F, the coil sensor will send a signal to the heat pump control which will return the system to heating operations automatically.

If some abnormal or temporary condition such as a high wind causes the heat pump to have a prolonged defrost cycle, the heat pump control will restore the system to heating operation automatically after 10 minutes.

There are three settings on the heat pump control – 30 minute, 60 minute and 90 minute. Models are shipped wired on the 30 minute setting for greatest operating economy. If special circumstances require a change to another time, remove wire connected to terminal 30 and reconnect to desired terminal. Refer to Figure 21. The manufacturer's recommendation is for 30 minute defrost cycles.

There is a cycle speed up jumper on the control. This can be used to reduce the time between defrost cycle operation without waiting for time to elapse.

There is an initial defrost jumper (sen jmp) on the control that can be used at any outdoor ambient during the heating cycle to simulate a 0° coil temperature. This can be used to check defrost operation of the unit without waiting for the outdoor ambient to fall into the defrost region.

Use a small screwdriver or other metallic object, or another 1/4 inch QC, to short between the *SPEEDUP* terminals to accelerate the HPC timer and initiate defrost. Be careful not to touch any other terminals with the instrument used to short the *SPEEDUP* terminals. It may take up to 10 seconds with the *SPEEDUP* terminals shorted for the speedup to be completed and the defrost cycle to start.

As soon as the defrost cycle kicks in remove the shorting instrument from the SPEEDUP terminal. Otherwise the timing will remain accelerated and run through the 1- minute maximum defrost length sequence in a matter of seconds and will automatically terminate the defrost sequence.

There is an initial defrost jumper (sen jmp) on the control that can be used at any outdoor ambient during the heating cycle to simulate a 0° coil temperature. This can be used to check defrost operation of the unit without waiting for the outdoor ambient to fall into the defrost region.

By placing a jumper across the *SEN JMP* terminals (a 1/4 inch QC terminal works best) the defrost sensor mounted on the outdoor coil is shunted out and will activate the timing circuit. This permits the defrost cycle to be checked out in warmer weather conditions without the outdoor temperature having to fall into the defrost region.

In order to terminate the defrost test the *SEN JMP* jumper must be removed.. If left in place too long the compressor could stop due to the high pressure control opening because of high pressure condition created by operating in the cooling mode with outdoor fan off. Pressure will rise fairly fast as there is likely no actual frost on the outdoor coil in this artificial test condition.

There is also a 5 minute compressor time delay function built into the HPC. This is to protect the compressor from short cycling conditions. In some instances it is helpful to the service technician to override or speed up this timing period, and shorting out the *SPEEDUP* terminals for a few seconds can do this.

TABLE 5
TROUBLESHOOTING

Sympton	Possible Cause	What to Check	How to Check or Repair
Compressor contactor does not energize (cooling or heating)	Control circuit wiring	Check for R connection at unit, and 24V between R-C.	Run R connection to outdoor unit to power heat pump control.
	Compressor lock out	1) Check for 24V between L1-C on heat pump control. 2) Check across high pressure switch.	1) If no voltage between L1-C turn thermostat off and on again to reset high pressure switch. 2) If high pressure switch is open and will not reset, replace high pressure switch.
	Compressor short cycle protection	Check for 24V between CC-C and Y-C on heat pump control.	If no voltage between CC-C jumper speed up terminal and within 10 seconds power should appear between CC-C. Remove speed up jumper after 10 seconds.
	Heat pump control defective	Check all other possible causes. Manual 2100-034	Replace heat pump control.
	Contactor defective	Check for open or shorted coil winding.	Replace contactor.
Fan outdoor motor does not run (cooling or heating except during defrost)	Motor defective	Check for open or shorted motor winding.	Replace motor.
	Motor capacitor defective	Check capacitor rating. Check for open or shorted capacitor.	Replace capacitor.
	Heat pump control defective	Check across fan relay on heat pump control (Com-NC)	Replace heat pump control.
	460V models only – outdoor motor relay defective	Check relay for 24V to relay coil when compressor contactor is energized, and that contacts are closing properly.	Replace relay.
Reversing valve does not energize (heating only)	Reversing valve solenoid coil defective	Check for open or shorted coil.	Replace solenoid coil.
	Heat pump control defective	Check for 24V between RV-C and B-C.	1) Check control circuit wiring. 2) Replace heat pump control
Unit will not go into defrost (heating only)	Temperature sensor or heat pump control defective	Disconnect temperature sensor from board, and jumper across speed up terminals and sen jmp terminals. This should cause the unit to go through a defrost cycle within one minute.	1) If unit goes through defrost cycle, replace temperature sensor. 2) If unit does not go through defrost cycle, replace heat pump control.
Unit will not come out of defrost (heating only)	Temperature sensor or heat pump control defective	Jumper across speed up terminals. This should cause the unit to come out of defrost within one minute.	1) If unit comes out of defrost cycle, replace temperature sensor. 2) If unit does not come out of defrost cycle, replace heat pump control.

SOLID STATE HEAT PUMP CONTROL TROUBLESHOOTING PROCEDURE

1. Turn on AC power supply to indoor and outdoor units.
2. Turn thermostat blower switch to “fan on” – the indoor blower should start. (If it doesn’t, troubleshoot indoor unit and correct problem.)
3. Turn thermostat blower to “auto” position. Indoor blower should stop.
4. Set system switch to “heat” or “cool”. Adjust thermostat to call for heat or cool. The indoor blower, compressor and outdoor fan should start.

NOTE: If there was no power to 24 volt transformer, the compressor and outdoor fan motor will not start for 5 minutes. This is because of the compressor short cycle protection.

CHECKING TEMPERATURE SENSOR

1. Disconnect temperature sensor from board and from outdoor coil.
2. Use an ohmmeter and measure the resistance of the sensor. Also use ohmmeter to check for short or open.
3. Check resistance reading to chart of resistance use sensor ambient temperature. (Tolerance of part is ± 10%.)
4. If sensor resistance reads very low, then sensor is shorted and will not allow proper operation of the heat pump control.
5. If sensor is out of tolerance, shorted, open, or reads very low ohms then it should be replaced.

TABLE 6
TEMPERATURE (F) VS RESISTANCE (R) OF TEMPERATURE SENSOR

F	R	F	R	F	R	F	R
-25.0	196871	13.0	56985	53.0	19374	89.0	7507
-24.0	190099	14.0	55284	52.0	18867	90.0	7334
-23.0	183585	15.0	53640	53.0	18375	91.0	7165
-22.0	177318	16.0	52051	54.0	17989	92.0	7000
-21.0	171289	17.0	50514	55.0	17434	93.0	6840
-20.0	165487	18.0	49028	56.0	16984	94.0	6683
-19.0	159904	19.0	47590	57.0	16547	95.0	6531
-18.0	154529	20.0	46200	58.0	16122	96.0	6383
-17.0	149355	21.0	44855	59.0	15710	97.0	6239
-16.0	144374	22.0	43554	60.0	15310	98.0	6098
-15.0	139576	23.0	42295	61.0	14921	99.0	5961
-14.0	134956	24.0	41077	62.0	14544	100.0	5827
-13.0	130506	25.0	39898	63.0	14177	101.0	5697
-12.0	126219	26.0	38757	64.0	13820	102.0	5570
-11.0	122089	27.0	37652	65.0	13474	103.0	5446
-10.0	118108	28.0	36583	66.0	13137	104.0	5326
-9.0	114272	29.0	35548	67.0	12810	105.0	5208
-8.0	110575	30.0	34545	68.0	12492	106.0	5094
-7.0	107010	31.0	33574	69.0	12183	107.0	4982
-6.0	103574	32.0	32634	70.0	11883	108.0	4873
-5.0	100260	33.0	31723	71.0	11591	109.0	4767
-4.0	97064	34.0	30840	72.0	11307	110.0	4663
-3.0	93981	35.0	29986	73.0	11031	111.0	4562
-2.0	91008	36.0	29157	74.0	10762	112.0	4464
-1.0	88139	37.0	28355	75.0	10501	113.0	4367
0.0	85371	38.0	27577	76.0	10247	114.0	4274
1.0	82699	39.0	26823	77.0	10000	115.0	4182
2.0	80121	40.0	26092	78.0	9760	116.0	4093
3.0	77632	41.0	25383	79.0	9526	117.0	4006
4.0	75230	42.0	24696	80.0	9299	118.0	3921
5.0	72910	43.0	24030	81.0	9077	119.0	3838
6.0	70670	44.0	23384	82.0	8862	120.0	3757
7.0	68507	45.0	22758	83.0	8653	121.0	3678
8.0	66418	46.0	22150	84.0	8449	122.0	3601
9.0	64399	47.0	21561	85.0	8250	123.0	3526
10.0	62449	48.0	20989	86.0	8057	124.0	3452
11.0	60565	49.0	20435	87.0	7869		
12.0	58745	50.0	19896	88.0	7686		

FAN BLADE SETTING DIMENSIONS

Any service work requiring removal or adjustment in the fan and/or motor area will require that the dimensions in Table 7 be checked and blade adjusted in or out of the motor shaft accordingly.

FIGURE 22
FAN BLADE SETTING

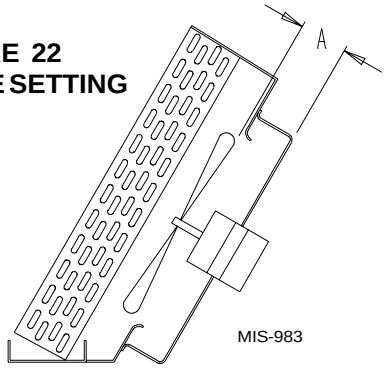

TABLE 7
FAN BLADE DIMENSIONS

MODEL	DIMENSION A (INCHES)
QH242	.750
QH302	.750
QH362	.750
QH422	.750
QH482	.750
QH602	.750

REFRIGERANT CHARGE

The correct system R-22 charge is shown on the unit rating plate. Optimum unit cooling performance will occur with a refrigerant charge resulting in a Super Heat as shown in Table 8. If correct charge is in doubt, recover the refrigerant and recharge per the charge on the unit rating plate.

TABLE 8
SUPER HEAT AT COMPRESSOR

MODEL	RATED CFM	95° F OD TEMPERATURE	82° F OD TEMPERATURE
QH242	800	16 - 18	14 - 16
QH302	1000	16 - 18	15 - 17
QH362	1200	16 - 18	14 - 16
QH422	1200	19 - 21	16 - 18
QH482	1400	23 - 25	22 - 24
QH602	1550	7 - 9	13 - 15

TABLE 9
INDOOR BLOWER PERFORMANCE

Model	Rated ESP	① Max. ESP	② Rated CFM	③ Optional CFM	④ Continuous CFB	⑤ Dehumidification CFM	CFM @ Max. EXP
QH242 ⑥	.10	0.5	800	-----	800	500	700
QH302	.15	0.8	1000	-----	1000	700	910
QH362	.15	0.8	1200	1000	1000	850	1175
QH422	.15	0.8	1200	1000	1000	850	1175
QH482	.15	0.8	1400	1100	1100	850	1175
QH602	.20	0.5	1550	1250	1250	1250	1400

NOTE: These units are equipped with a variable speed (ECM) indoor motor that automatically adjust itself to maintain approximately the same rate of indoor air flow in both heating and cooling, dry and wet coil conditions and at both 230/208 or 460 volts.

① Maximum ESP (inches WC) shown is with 1" thick disposable filter (reduced by .2 for 2" filter).

② Rated CFM for ducted applications – required for maximum performance rating. To obtain full CFM on models QH362 and QH422 connect the pink jumper wire (provided) to terminal #5 and #6 on the low voltage terminal block located in the circuit breaker box.

③ Optional CFM – the unit is shipped from the factory set to operate at the optional CFM level shown. This provides lower operating sound levels for non-ducted, free discharge applications. This reduces system capacity performance by approximately 2% at the same energy efficiency.

④ Continuous fan CFM is the total air being circulated during continuous fan mode.

⑤ Indoor air flow during periods of high humidity when system is operating under control of optional humidistat for maximum humidity reduction.

⑥ Models QH242 – when operating on 2nd stage heating the indoor air will increase to 1000 CFM.

TABLE 10
COOLING PRESSURE
(All Temperatures in Degrees F)

Model	Return Air Temperature	Pressure	AIR TEMPERATURE ENTERING OUTDOOR COIL								
			75 ①	80	85	90	95	100	105	110	115
QH242	75 deg. DB 62 deg. WB	Low Side	73	73	74	76	77	79	80	81	83
		High Side	195	199	214	229	244	259	274	289	304
	80 deg. DB 67 deg. WB	Low Side	78	78	79	80	82	84	85	87	88
		High Side	203	204	219	234	250	264	280	296	312
	85 deg. DB 72 deg. WB	Low Side	84	84	85	86	88	89	91	93	94
		High Side	121	213	228	244	259	274	290	305	320
QH302	75 deg. DB 62 deg. WB	Low Side	75	75	76	77	78	79	80	81	82
		High Side	226	202	242	258	273	319	303	319	335
	80 deg. DB 67 deg. WB	Low Side	80	80	81	82	83	84	85	86	87
		High Side	228	233	248	264	280	296	311	327	343
	85 deg. DB 72 deg. WB	Low Side	86	86	87	88	89	90	91	92	93
		High Side	238	240	257	273	290	306	323	339	356
QH362	75 deg. DB 62 deg. WB	Low Side	74	74	75	76	77	78	79	80	81
		High Side	212	215	233	251	269	287	305	323	341
	80 deg. DB 67 deg. WB	Low Side	79	79	80	81	82	83	84	85	86
		High Side	219	220	239	257	276	294	312	331	350
	85 deg. DB 72 deg. WB	Low Side	85	85	86	87	88	89	90	91	92
		High Side	223	228	247	267	286	305	324	343	363
QH422	75 deg. DB 62 deg. WB	Low Side	71	71	72	73	74	75	76	77	79
		High Side	246	248	264	281	299	318	339	362	385
	80 deg. DB 67 deg. WB	Low Side	75	76	77	78	79	80	81	82	83
		High Side	251	243	270	288	307	327	349	371	395
	85 deg. DB 72 deg. WB	Low Side	82	82	83	84	85	86	87	88	90
		High Side	261	262	279	298	318	330	361	384	409
QH482	75 deg. DB 62 deg. WB	Low Side	69	71	72	72	73	74	75	75	76
		High Side	221	237	252	270	287	305	323	343	363
	80 deg. DB 67 deg. WB	Low Side	75	76	76	77	78	79	80	80	81
		High Side	228	244	260	276	294	312	331	351	372
	85 deg. DB 72 deg. WB	Low Side	81	82	82	83	84	85	86	86	87
		High Side	237	252	269	285	304	323	342	363	385
QH602	75 deg. DB 62 deg. WB	Low Side	66	70	74	78	81	85	89	93	96
		High Side	241	258	276	294	314	332	353	372	373
	80 deg. DB 67 deg. WB	Low Side	71	75	79	83	87	91	95	99	103
		High Side	247	265	283	302	322	341	362	382	403
	85 deg. DB 72 deg. WB	Low Side	73	78	82	86	90	94	98	102	107
		High Side	256	274	293	313	333	353	375	395	400

Low side pressure ± 2 psig
High side pressure ± 5 psig

Tables are based upon rated CFM (airflow) across the evaporator coil. If there is any doubt as to correct operating charge being in the system, the charge should be removed, system evacuated and recharged to serial plate instructions.

① 75° F outdoor temperature condenser fan motor is running on low speed.

TABLE 11
HEATING PRESSURE
(All Temperatures in Degrees F)

Model	Return Air Temp.	Pressure	0	5	10	15	17	20	25	30	35	40	47	50	55	60
QH242	70 deg	Low Side	7	12	17	23	25	28	33	39	44	50	57	60	65	71
		High Side	147	155	164	172	176	181	189	198	206	215	227	232	240	249
QH302	70 deg	Low Side	16	20	24	28	30	33	37	41	45	49	55	58	62	67
		High Side	157	163	169	175	177	180	187	193	199	205	213	217	222	228
QH362	70 deg	Low Side	13	17	21	25	27	30	34	38	42	46	52	55	59	63
		High Side	147	153	159	164	167	171	176	182	188	194	202	206	211	217
QH422	70 deg	Low Side	13	18	22	26	28	31	35	39	44	48	54	57	61	65
		High Side	161	168	174	180	183	187	193	199	206	212	221	225	231	237
QH482	70 deg	Low Side	11	15	20	24	26	29	33	38	42	47	53	56	60	65
		High Side	154	160	167	173	176	180	186	192	199	206	215	219	225	232
QH602	70 deg	Low Side	59	60	61	62	63	63	64	65	66	67	68	69	70	71
		High Side	156	162	168	175	177	181	188	194	200	207	216	220	226	233