INSTALLATION INSTRUCTIONS

QW SERIES WATER SOURCE PACKAGED HEAT PUMP

Models:

QW242 QW302
QW361 QW421
QW481 QW601

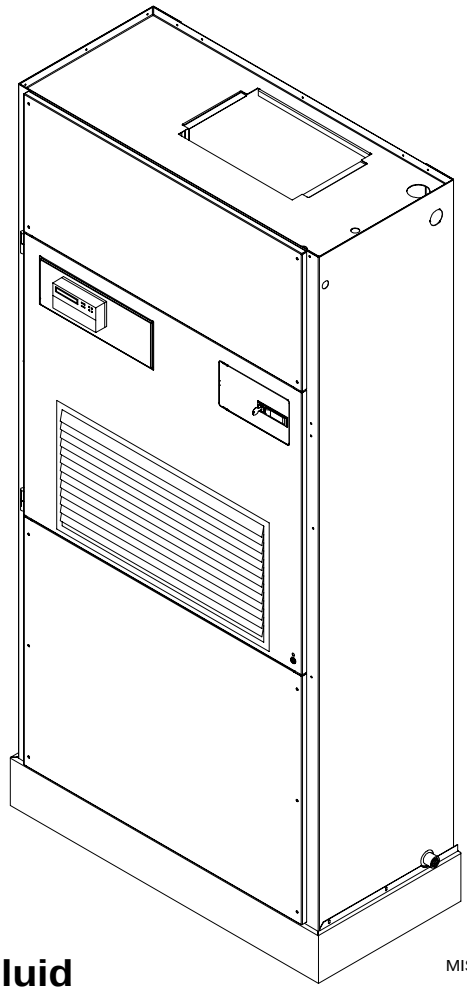

MIS-1554

Earth Loop Fluid Temperatures 25 – 110
Ground Water Temperature 45 – 75

Bard Manufacturing Company
Bryan, Ohio 43506
Since 1914...Moving ahead, just as planned.

Manual No.: 2100-419A
Supersedes: 2100-419
File: Vol II Tab 14
Date: 06-01-03

© Copyright 2003

CONTENTS

Getting Other Information and Publications
For more information, contact these publishers: 1

QW General Information
QW Model Nomenclature 2
Shipping Damage 4
Unit Removal From Skid 4
Handling Unit After Removal From Skid 4
Removal of Wall Bracket from Shipping Location ... 5
General 5
Minimum Installation Height 5
Duct Work 8
Filters 8
Condensate Drain 8
Mist Eleminator Service 10

Installation Instructions
Mounting the Unit 13
Wiring – Main Power 16
Wiring – Low Voltage Wiring 16
Low Voltage Connections 17

Start Up
Description of Standard Equipment 21
Compressor Control Module 21
Adjustments 21
Optional CFM 22
Important Installer Note 22
Phase Monitor 22
Service Hints 22
Sequence of Operation 22
Pressure Service Ports 23
Pressure Tables 26-27
Optional Accessories 28

Closed Loop (Earth Coupled Ground Loop Applications)
Circulation System Design 29
Copper Water Coil Application 29
Start Up Procedure for Closed Loop System 30

Open Loop (Well System Applications)
Water Connections 32
Copper Water Coil Limitations 32
Well Pump Sizing 33
Start Up Procedure for Open Loop System 33
Water Corrosion 34
Remedies of Water Problems 34
Lake and Pond Installations 35
Cooling Tower / Boiler Application 37

Service
Service Hints 40
Un-brazing System Components 40

Troubleshooting ECM Blower Motors 41-42

Quick Referance Troupbleshooting Chart for Water to Air Heat Pump 43

Ground Source Heat Pump Performance Report 44-45

CONTENTS

Figures

Figure 1 Unit Dimensions 3
Figure 2 Removal of Unit From Skid 4
Figure 3 Proper Handling of Unit After Removal from Skid 5
Figure 4 Installation of Unit w/Wall Sleeve 6
Figure 5 Installation With Free Blow Plenum 7
Figure 6 Ducted Application 7
Figure 7 Supply Duct Connections 8
Figure 8 Condensate Drain 9
Figure 8A Side Drain (Side View) 9
Figure 8B Optional Rear Drain 9
Figure 8C Rear Drain (Top View) 10
Figure 9 Fresh Air Damper Removal 11
Figure 10 Removal of QTEC ERV 12
Figure 11 Remove Locking Screws from Wheels 13
Figure 12 Unit Mounting Without Wall Sleeve 14
Figure 13 Component Location 15
Figure 14 Low Voltage Wire Harness Plug 17
Figure 15 Remote Thermostat Wiring "X" Option 18
Figure 16 Remote Thermostat Wiring "A" Option 19
Figure 17 Remote Thermostat Wiring "D" Option 20
Figure 18 Fluid Connections w/Ventilation Wall Sleeve 24
Figure 19 Fluid Connections w/o Ventilation Wall Sleeve 25
Figure 20 Circulation System 29
Figure 21 Water Temperature and Pressure Test Procedure 30
Figure 22 Performance Model WGPM-1C 31
Figure 23 Performance Model WGPM-2C 31
Figure 24 Piping Diagram 32
Figure 25 Cleaning Water Coil 35
Figure 26 Water Well System 36
Figure 27 Water Source H/P Cooling Cycle 38
Figure 28 Water Source H/P Heating Cycle 39

Tables

Table 1 Electrical Specifications 2
Table 2 Operating Voltage Range 16
Table 3 Wall Thermostats and Subbase Combinations 16
Table 4 Indoor Blower Performance 23
Table 5 Cooling Pressure Table 26
Table 6 Heating Pressure 27
Table 7 Optional Accessories 28
Table 8 Constant Flow Valves 32
Table 9 Water Flow and Pressure Drop 37

GETTING OTHER INFORMATION AND PUBLICATIONS

These publications can help you install the air conditioner or heat pump. You can usually find these at your local library or purchase them directly from the publisher. Be sure to consult current edition of each standard.

National Electrical Code ..... ANSI/NFPA 70

Standard for the Installation ..... ANSI/NFPA 90A
of Air Conditioning and
Ventilating Systems

Standard for Warm Air ..... ANSI/NFPA 90B
Heating and Air
Conditioning Systems

Load Calculation for Residential ..... ACCA Manual J
Winter and Summer
Air Conditioning

Duct Design for Residential ..... ACCA Manual D
Winter and Summer Air Conditioning
and Equipment Selection

Closed-Loop/Ground Source Heat Pump ..... IGSHPA
Systems Installation Guide

Grouting Procedures for Ground-Source ..... IGSHPA
Heat Pump Systems

Soil and Rock Classification for the Design ... IGSHPA
of Ground-Coupled Heat Pump Systems

Ground Source Installation Standards ..... IGSHPA

Closed-Loop Geothermal Systems – Slinky ... IGSHPA
Installation Guide

FOR MORE INFORMATION, CONTACT THESE PUBLISHERS:

ACCA **Air Conditioning Contractors of America**
1712 New Hampshire Avenue
Washington, DC 20009
Telephone: (202) 483-9370
Fax: (202) 234-4721

ANSI **American National Standards Institute**
11 West Street, 13th Floor
New York, NY 10036
Telephone: (212) 642-4900
Fax: (212) 302-1286

ASHRAE **American Society of Heating Refrigerating, and Air Conditioning Engineers, Inc.**
1791 Tullie Circle, N.E.
Atlanta, GA 30329-2305
Telephone: (404) 636-8400
Fax: (404) 321-5478

NFPA **National Fire Protection Association**
Batterymarch Park
P.O. Box 9101
Quincy, MA 02269-9901
Telephone: (800) 344-3555
Fax: (617) 984-7057

IGSHPA **International Ground Source Heat Pump Association**
490 Cordell South
Stillwater, OK 74078-8018

QW SERIES WATER SOURCE GENERAL INFORMATION

QW MODEL NOMENCLATURE

QW 36 1 - A 0Z B X V X X X

MODEL NUMBER
QW - QTEC Model Water Source Heat Pump

CAPACITY
24 - 2 Ton
30 - 2-1/2 Ton
36 - 3 Ton
42 - 3-1/2 Ton
48 - 4 Ton
60 - 5 Ton

REVISION

VOLTS & PHASE
A - 2630/208-60-1
B - 2308208-60-3
C - 460-60-3

KW
0Z - None

VENTILATION OPTIONS
B - Blank-off Plate
X - Barometric Fresh Air Damper
V - Commercial Ventilator - Motorized Spring Return w/Exhaust
P - Commercial Ventilator - Motorized power return w/Exhaust
R - Energy Recovery Ventilator w/Exhaust

FILTER OPTIONS
X - 1 Inch Fiberglass (Standard)
F - 2 Inch Fiberglass
P - 2 Inch Pleated

COLOR OPTIONS
V - Platinum w/Slate Front (Vinyl)
4 - Gray (Painted)

CLIMATE CONTROL OPTIONS
X - None
A - Electronic/Non Prog/Man/Auto
D - Electronic/Prog/Man/Auto

COIL OPTIONS
X - Standard Cupronickel Water Coil
4 - Copper Water Coil

INTERNAL CONTROLS
X - Standard
- High Pressure Switch
- Low Pressure Switch
- Compressor Time Delay

TABLE 1
ELECTRICAL SPECIFICATIONS

MODEL	RATED VOLTS & PHASE	SINGLE CIRCUIT				
		NO. FIELD POWER CIRCUITS	③ MINIMUM CIRCUIT AMPACITY	① MAXIMUM EXTERNAL FUSE OR CIRCUIT BREAKER	② FIELD POWER WIRE SIZE	② GROUND WIRE SIZE
QW242-A0Z	230/208-1	1	19	25	10	10
QW242-B0Z	230/208-3	1	14	20	12	12
QW242-C0Z	460-3	1	8	15	14	14
QW302-A0Z	230/208-1	1	21	30	10	10
QW302-B0Z	230/208-3	1	16	20	12	12
QW302-C0Z	460-3	1	10	15	14	14
QW361-A0Z	230/208-1	1	24	35	10	10
QW361-B0Z	230/208-3	1	19	25	10	10
QW361-C0Z	460-3	1	10	15	14	14
QW421-A0Z	230/208-1	1	27	40	8	10
QW421-B0Z	230/208-3	1	20	30	10	10
QW421-C0Z	460-3	1	11	15	14	14
QW481-A0Z	230/208-1	1	31	45	8	10
QW481-B0Z	230/208-3	1	24	35	8	10
QW481-C0Z	460-3	1	12	15	14	14
QW601-A0Z	230/208-1	1	45	60	8	10
QW601-B0Z	230/208-3	1	34	45	8	10
QW601-C0Z	460-3	1	16	20	12	12

① Maximum size of the time delay fuse or HACR type circuit breaker for protection of field wiring conductors.
② Based on 75° C copper wire. All wiring must conform to the National Electrical Code and all local codes.
③ These "Minimum Circuit Ampacity" values are to be used for sizing the field power conductors. Refer to the National Electric Code (latest revision), article 310 for power conductor sizing. *CAUTION: When more than one field power conductor circuit is run through one conduit, the conductors must be derated. Pay special attention to Note 8 of Table 310 regarding Ampacity Adjustment Factors when more than three conductors are in a raceway.*

FIGURE 1
UNIT DIMENSIONS

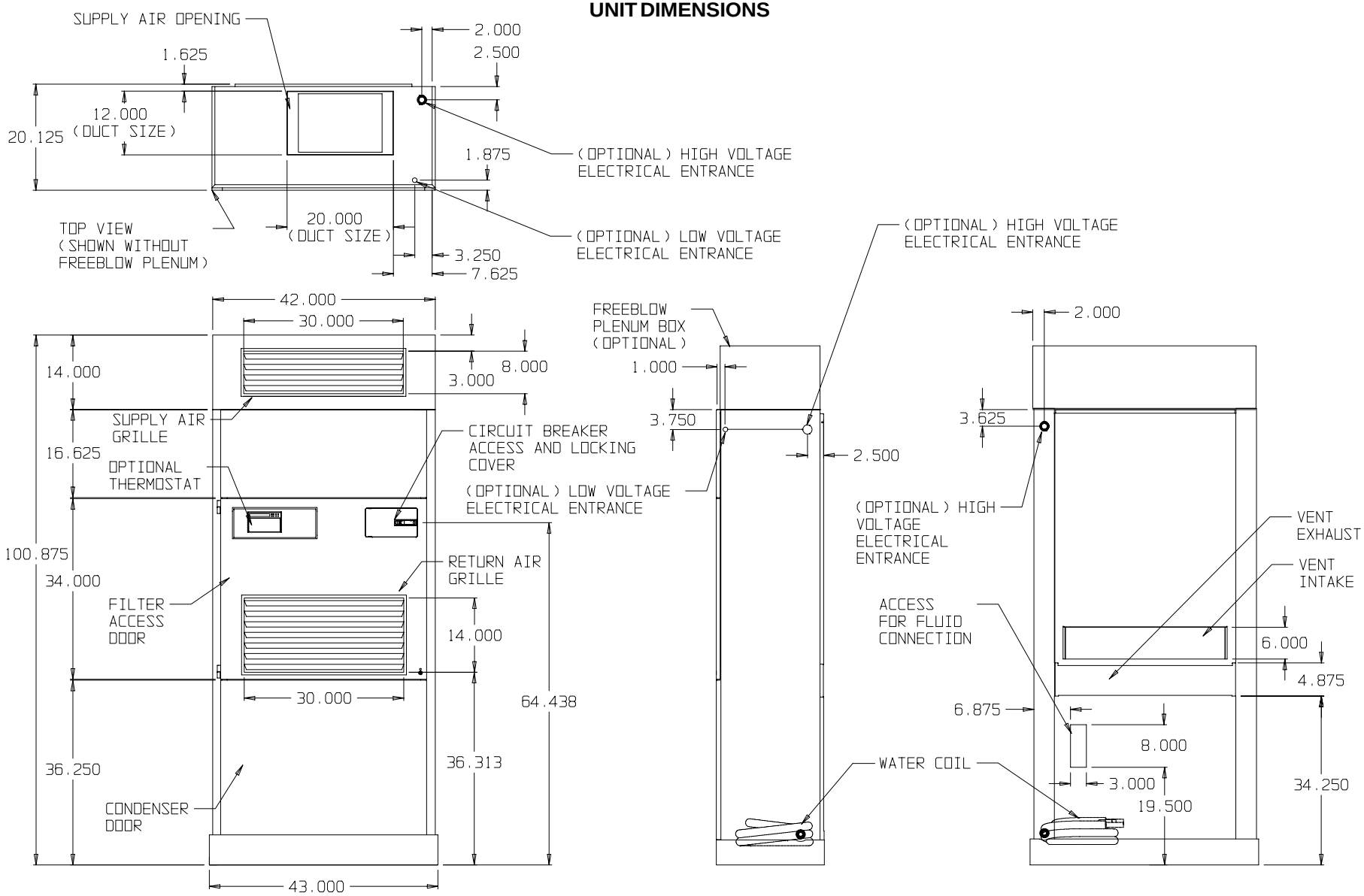

SHIPPING DAMAGE

Upon receipt of equipment, the carton should be checked for external signs of shipping damage. The skid must remain attached to the unit until the unit is ready for installation. If damage is found, the receiving party must contact the last carrier immediately, preferably in writing, requesting inspection by the carrier's agent.

UNIT REMOVAL FROM SKID

⚠ WARNING

This unit is heavy and requires more than one person to handle and remove from the skid. Check unit wheels to ensure that wheels are locked before removing from skid. Extreme caution must be taken to prevent injury to personnel and damage to the unit.

It is recommended that the unit not be removed from the skid with a fork lift.

The shipping brackets on each side of the unit must be removed and discarded. See Figure 2-A on Page 5. The return air grille panel can be removed to provide a place to hold the unit. The unit can be slid forward on the skid until the front wheels hang over the edge of the skid. See Figure 2-B. The unit can be tipped forward and slid down the edge of the skid until the front wheels touch the ground. See Figure 2-C. The wheels will not roll. They are shipped from the factory locked so they will not roll. The back of the skid will have to be held down to keep it from tipping up. The skid can be slid out from under the unit. The unit can then be set upright.

HANDLING UNIT AFTER REMOVAL FROM SKID

⚠ WARNING

Exercise extreme caution when pushing the unit on the rollers. Handle and push from the lower 1/3 of the unit. Insure that debris is not on the floor where the unit is to be moved on the rollers. Failure to do so could result in the unit tipping over and causing bodily injury and/or damage to the unit.

The unit will have to be turned sideways and removed from the skid to fit through a 36" doorway. If the door height allows, the unit can be slid sideways through the door.

If the unit can not be slid through the door, then the unit will have to be put on a cart and tipped down to roll through the door. It is recommended that an appliance cart by used with a strap to hold the unit on the cart. The wheels of the unit ***must be locked***. If the wheels were allowed to roll, the unit could roll off the cart. ***The unit should always be carted from the left side.*** This is the side where the compressor is located. See Figure 3. The blade of the appliance cart should be slid under the wheels of the unit. The strap of the appliance cart should be placed around the unit and strapped tightly. Help will be required to tip the unit back onto the cart. The unit can be leaned far enough back to be rolled through the door. Be careful when setting the unit back up to keep from damaging the unit.

FIGURE 2
REMOVAL OF UNIT FROM SKID

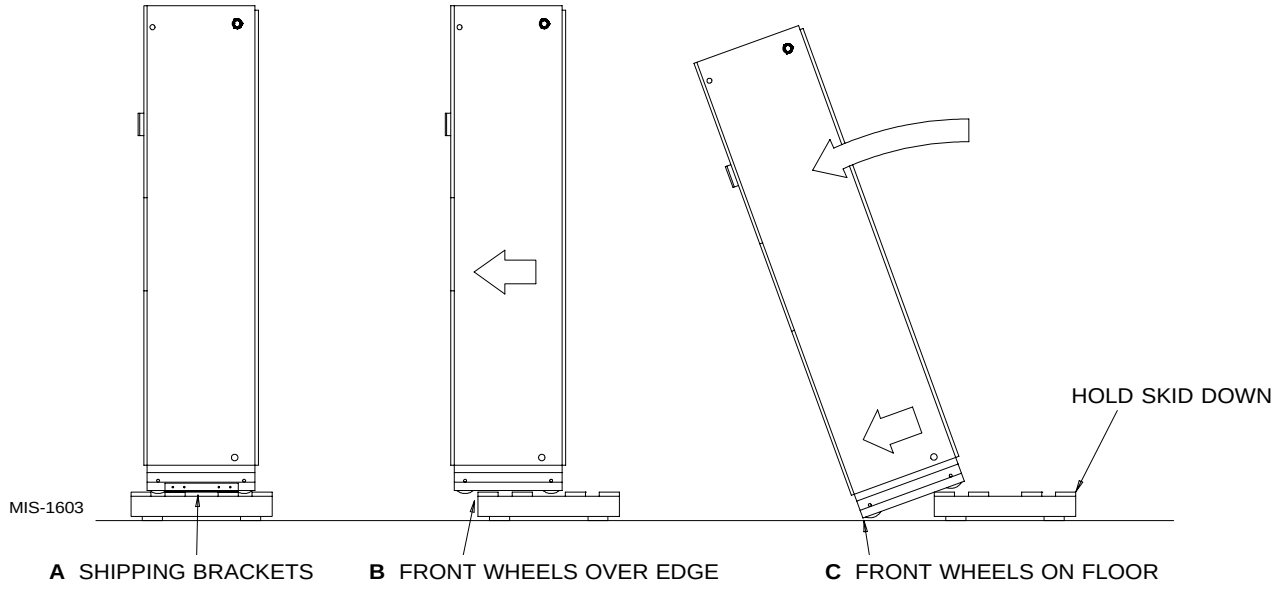

FIGURE 3
PROPER HANDLING OF UNIT
AFTER REMOVAL FROM SKID

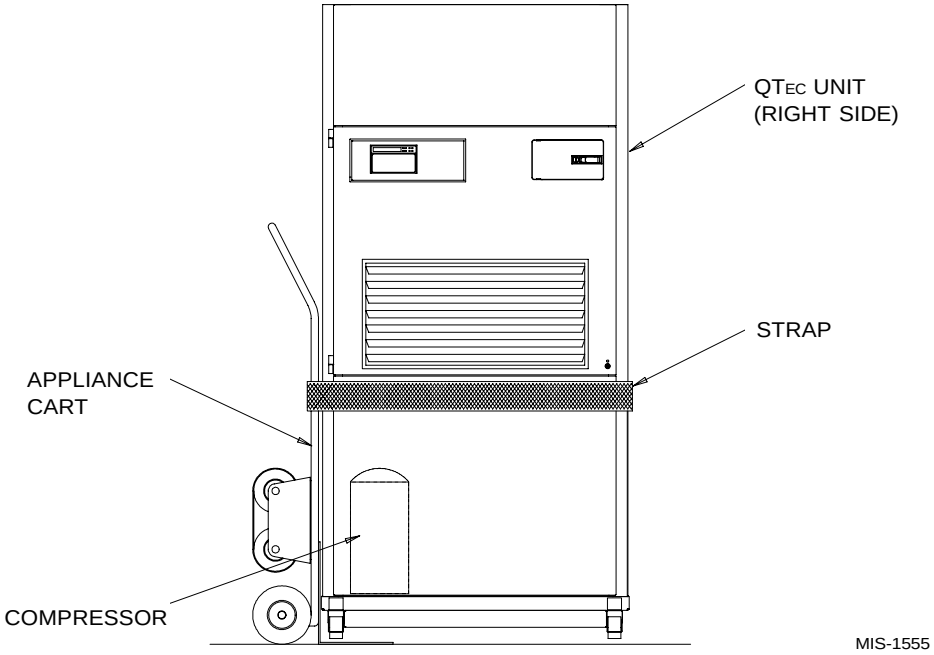

REMOVAL OF WALL BRACKET FROM SHIPPING LOCATION (UNITS WITH BLANK OFF PLATE ONLY)

The wall brackets are attached to the back of the unit. Remove and retain the wall brackets for use when attaching the unit to the wall. In units equipped with a ventilator a wall sleeve is required and these two wall brackets are not included. A different style bracket is supplied with the sleeve assembly.

GENERAL

The equipment covered in this manual is to be installed by trained, experienced service and installation technicians.

The unit is designed for use with or without duct work. For use without duct work, Plenum Box QPB** is recommended.

These instructions explain the recommended method to install the water source self-contained unit and the electrical wiring connections to the unit.

These instructions and any instructions packaged with any separate equipment required to make up the entire air conditioning system should be carefully read before beginning the installation. Note particularly “Start Procedure” and any tags and/or labels attached to the equipment.

While these instructions are intended as a general recommended guide, they do not supersede any national and/or local codes in any way. Authorities having jurisdiction should be consulted before the installation is made. See Page 1 for information on codes and standards.

Size of unit for a proposed installation should be based on heat loss calculation made according to methods of Air Conditioning Contractors of America (ACCA). The air duct should be installed in accordance with the Standards of the National Fire Protection Systems of Other Than Residence Type, NFPA No. 90A, and Residence Type Warm Air Heating and Air Conditioning Systems, NFPA No. 90B. Where local regulations are at a variance with instructions, installer should adhere to local codes.

MINIMUM INSTALLATION HEIGHT

The minimum installation height of the unit with a Free Blow Plenum is 8 ft. 6 in. This provides enough clearance for the plenum to be removed. See Figure 5.

The minimum installation height for ducted applications is 8 ft. 4-1/2 in. This provides enough clearance to install the duct work. See Figure 6.

FIGURE 4
INSTALLATION OF UNIT THRU WALL WITH WALL SLEEVE

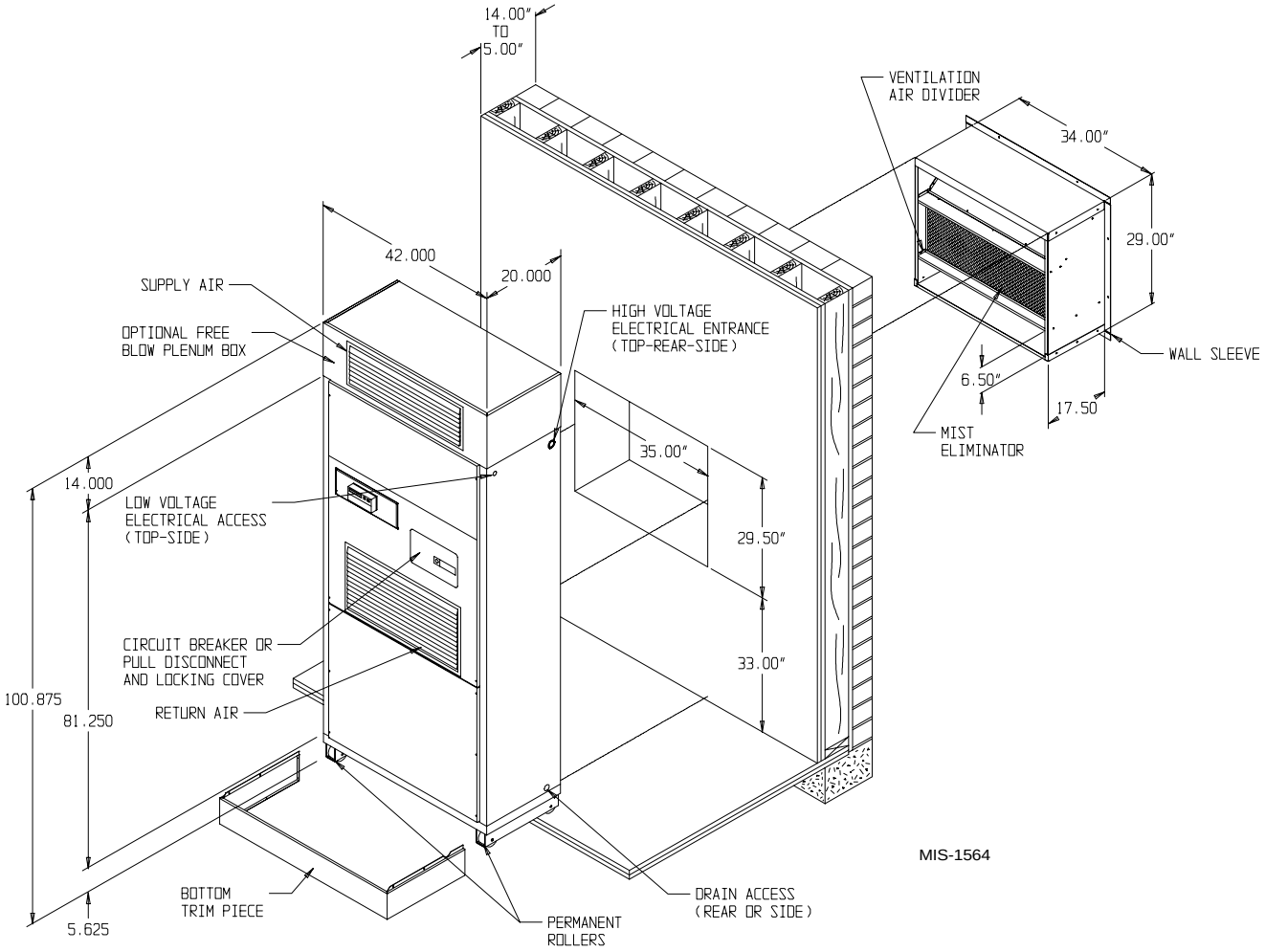

FIGURE 5
INSTALLATION WITH FREE BLOW PLENUM

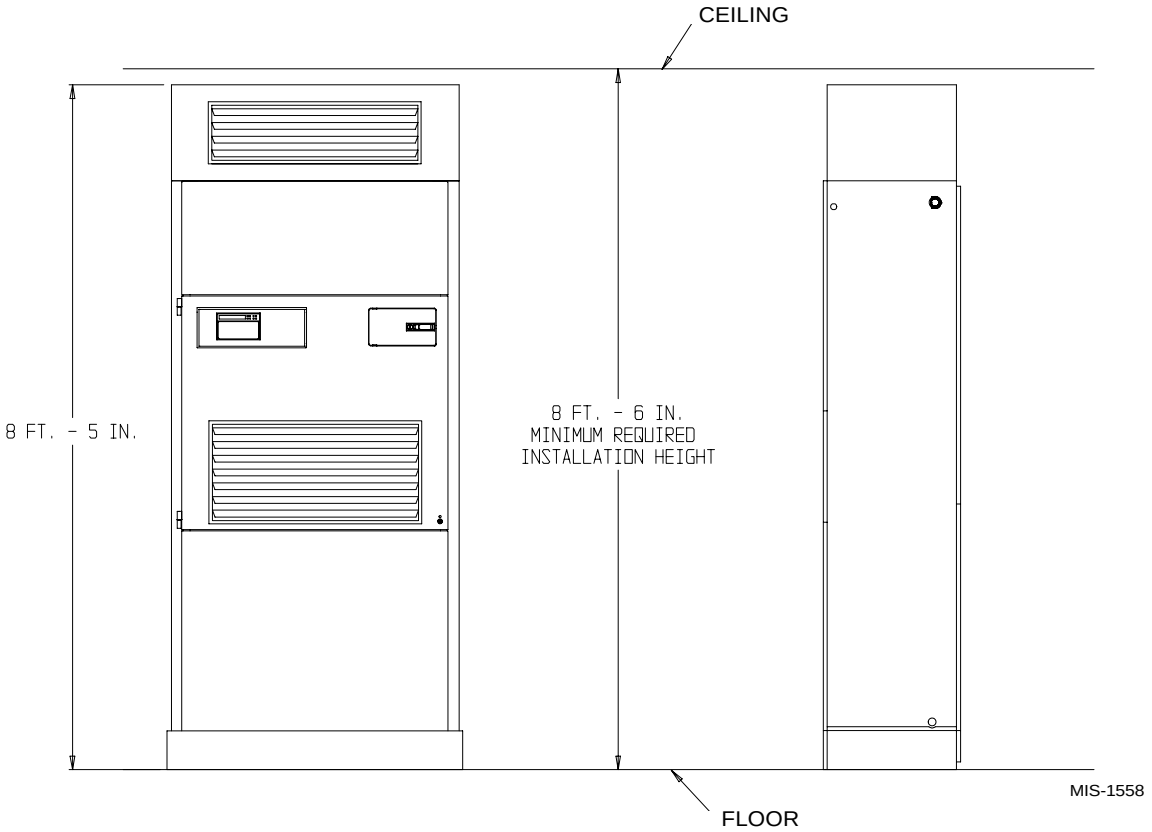

FIGURE 6
DUCTED APPLICATION

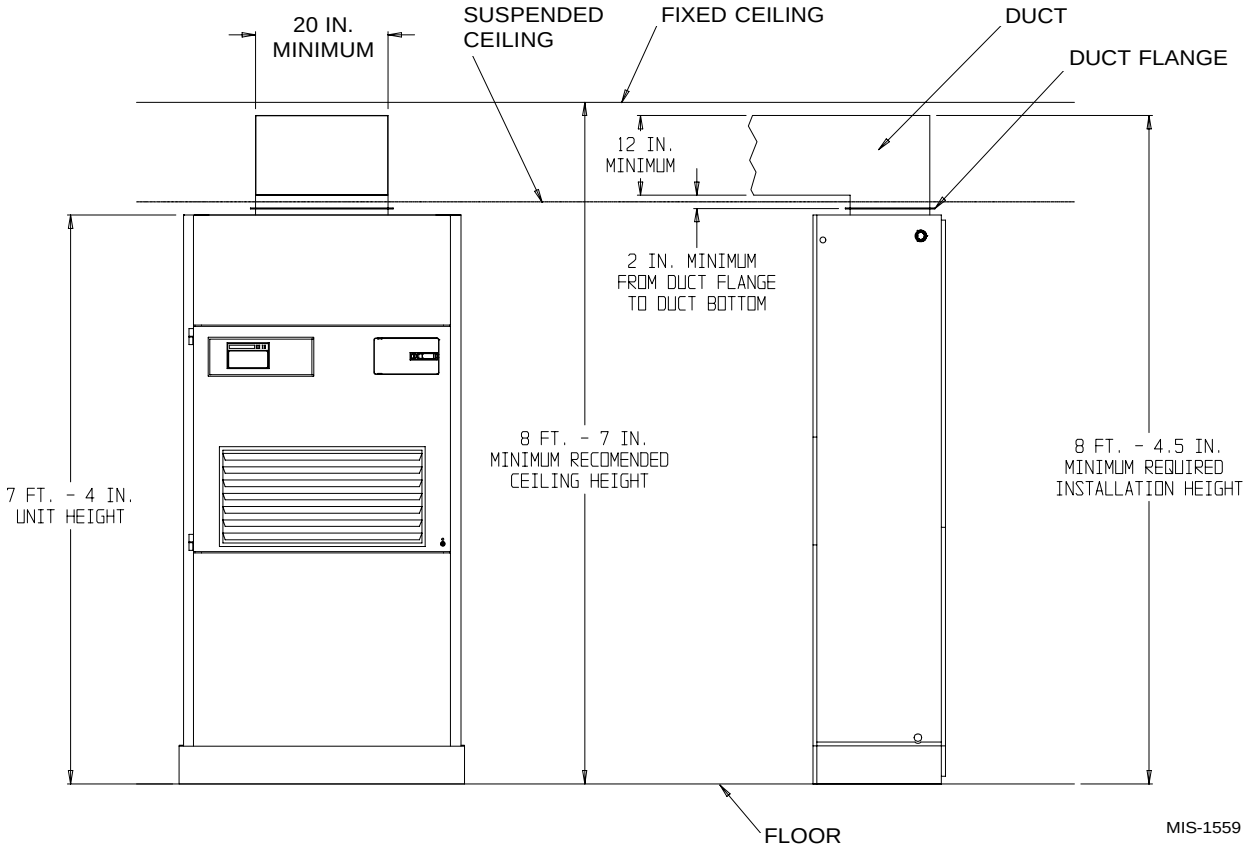

DUCT WORK

Any heat pump is more critical of proper operating charge and an adequate duct system than a straight air conditioning unit. All duct work must be properly sized for the design air flow requirement of the equipment. Air Conditioning Contractors of America (ACCA) is an excellent guide to proper sizing. All duct work or portions thereof not in the conditioned space should be properly insulated in order to both conserve energy and prevent condensation or moisture damage. When duct runs through unheated spaces, it should be insulated with a minimum of one inch of insulation. Use insulation with a vapor barrier on the outside of the insulation. Flexible joints should be used to connect the duct work to the equipment in order to keep the noise transmission to a minimum.

The QTEC series heat pump has provision to attach a supply air duct to the top of the unit. Duct connection size is 12 inches x 20 inches. The duct work is field supplied and must be attached in a manner to allow for ease of removal when it becomes necessary to slide the unit out from the wall for service. See Figure 7 for suggested attachment method.

NOTE: Unit cabinet, supply air duct and free blow plenum are approved for "0" clearance to combustible material.

FIGURE 7
SUPPLY DUCT CONNECTIONS

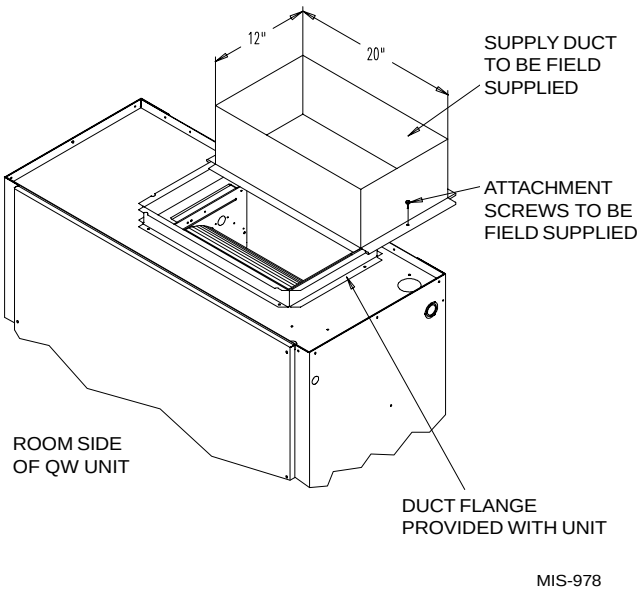

The QTEC series heat pumps are designed for use with free return (non-ducted) and either free blow with the use of QPB Plenum Box or a duct supply air system.

The QPB Plenum Box mounts on top of the unit and has both vertically and horizontally adjustable louvers on the front discharge grille. See Optional Accessories, Page 18, for the correct Plenum Box model number.

When used with a ducted supply, a QCX Cabinet Extension can be used to conceal the duct work above the unit to the ceiling. This extends 20" above the unit for a total height above the floor of 10'-7/8". See Optional Accessories, Page 18 for the correct Cabinet Extension model number. The unit is equipped with a variable speed indoor blower motor which increases in speed with an increase in duct static pressure. The unit will therefore deliver proper rated air flow up to the Maximum ESP shown in Table 5. However, for quiet operation of the air system, the duct static should be kept as low as practical, within the guidelines of good duct design.

FILTERS

Two 1 inch throw away filters are supplied with each unit. The filters fit into a fixed rack.

The filters are serviced from the inside of the building . To gain access to the filters release the latch on the circuit breaker door and one 1/4 turn fastener near the bottom of the door. This door is hinged on the left so it will swing open.

The internal filter brackets are adjustable to accommodate 2 inch filters. The tabs for the 1 inch filters must be bent down to allow the 2 inch filters to slide in place.

CONDENSATE DRAIN

The condensate drain hose is routed down from the evaporator drain pan on the right side of the unit into the compressor compartment. There are three locations that the drain can exit the cabinet. For a stand pipe type of drain, the drain hose can exit the rear of the cabinet. There is adequate hose length to reach the floor on the right hand side of the unit.

If the drain is to be hard plumbed, there is a 3/4 inch pipe connection located on the right hand cabinet side near the rear and one on the cabinet rear panel. In these installations the drain tube is to be slipped over the pipe connection inside of the cabinet.

See Figures 8A, 8B and 8C.

NOTE: Whichever type of drain connection is used a "P" trap must be formed. See Figure 8.

FIGURE 8
CONDENSATE DRAIN

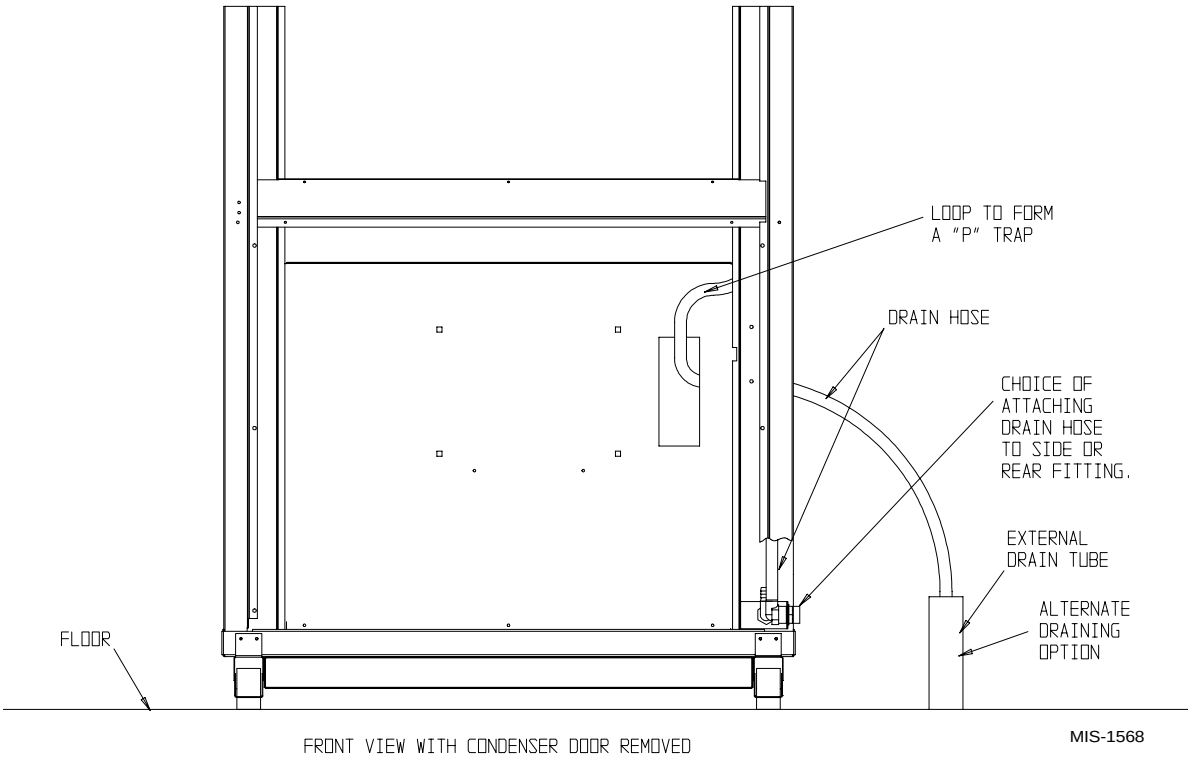

The ***side drain*** requires a water trap for proper drainage. See Figure 8A. The drain can be routed through the floor or through the wall. ***If the drain is to be routed through an unconditioned space, it must be protected from freezing***. The drain line must be able to be removed from the unit if it is necessary to remove the unit from the wall.

FIGURE 8A
SIDE DRAIN (SIDE VIEW)

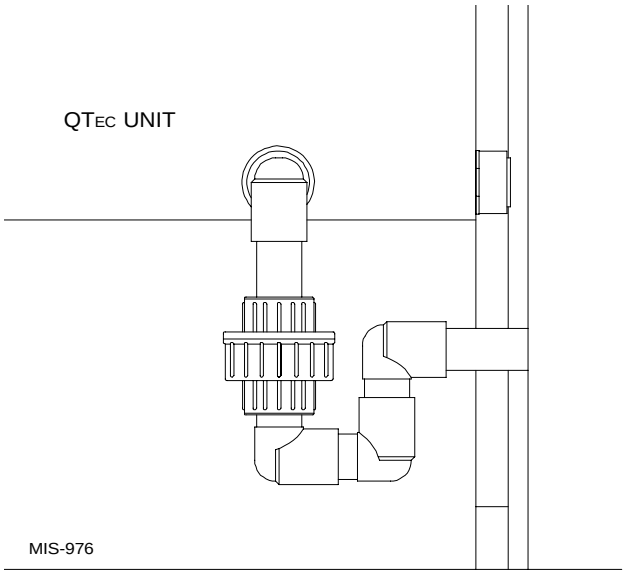

FIGURE 8B
OPTIONAL REAR DRAIN

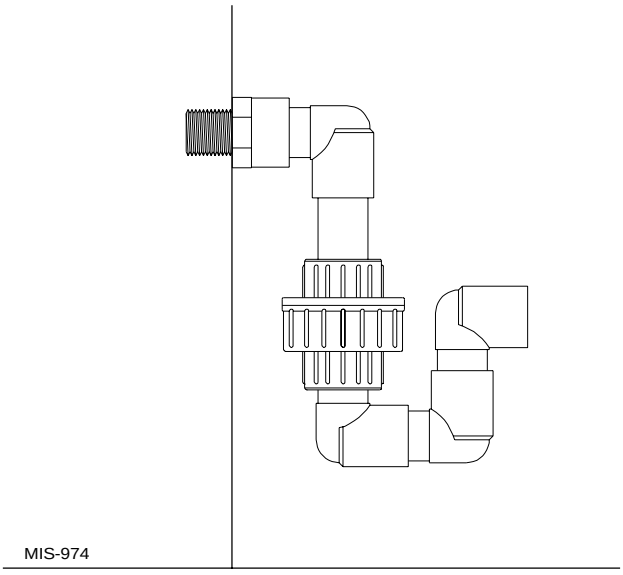

The ***rear drain*** can be used with wall thickness of up to 10 inches where a water trap can be installed between the unit and the interior wall. See Figure 8B. The trap cannot extend beyond the edge of the unit or it will interfere with the wall mounting bracket. The drain can be routed through the floor or through the wall. If the drain is routed through the wall, the drain line must be positioned such that it will not interfere with the sleeve flange or the grille. See Figure 8C. ***If the drain is to be routed through an unconditioned space, it must be protected from freezing.***

FIGURE 8C
REAR DRAIN (TOP VIEW)

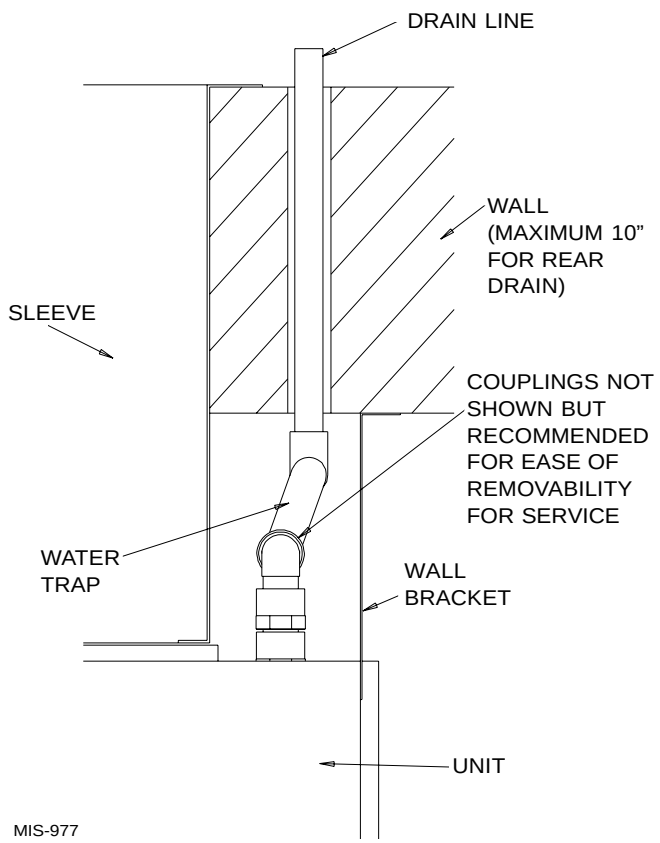

MIST ELIMINATOR SERVICE (Optional – only used with one of the vent options)

A mist eliminator is supplied with the wall sleeve. The mist eliminator is constructed of aluminum frame and mesh. The mist eliminator is located in the top section of the wall sleeve and can be removed from the inside of the building without removing the unit from the wall. This requires that the ventilation package must be removed.

The steps necessary to remove each of the vent options are listed following.

It is recommended that the mist eliminator be inspected annually and serviced as required. The mist eliminator can be inspected from the outside of the building by looking through the outdoor grille. The mist eliminator can be serviced from the outside. The outdoor grille must be removed to do so.

The mist eliminator can be cleaned by washing with soap and water. The excess water should be shaken off the mist eliminator before it is reinstalled.

BAROMETRIC FRESH AIR DAMPER (Optional)

Before start to remove make sure the power has been turned off. The hinged return air grille panel must be opened. The fresh air damper assembly can be seen on the back of the unit. Refer to Figure 9.

1. The fresh air damper is attached to the back of the unit with one screw on either side of the assembly. Both of the screws must be removed.
2. Once the mounting screws are removed, tilt the assembly down and lift it out.

The mist eliminator can be seen through the opening. The mist eliminator must be raised up and the bottom can be pulled toward the front of the unit.

COMMERCIAL ROOM VENTILATOR OPTION

Before stating the removal make sure the power has been turned off. The hinged return air grille must be opened. The commercial room ventilator (CRV) can be seen after the panel has been removed. The CRV must be removed to gain access to the mist eliminator.

1. The two mounting screws in the front of the CRV must be removed.
2. The power connectors for the CRV (located on the right side of the unit) must be disconnected. Squeeze the tabs on the sides of the connector and pull straight out. Unplug both of the connectors.
3. Slide the CRV straight out of the unit.

The mist eliminator can be seen through the opening in the back of the unit. The mist eliminator must be raised up and the bottom can be pulled toward the front of the unit and removed.

FIGURE 9
FRESH AIR DAMPER REMOVAL

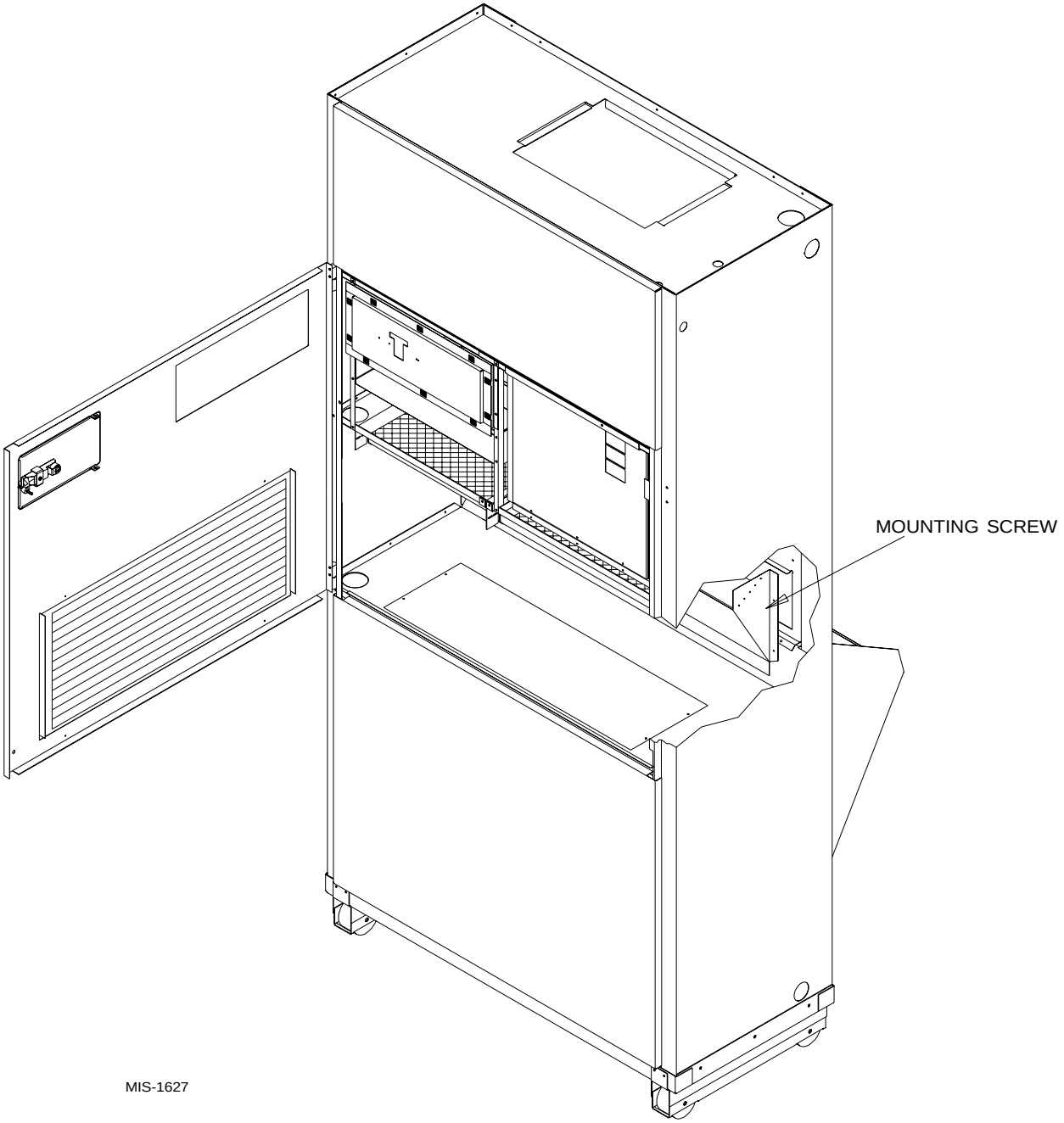

QTEC ENERGY RECOVERY VENTILATOR OPTION

Before starting the removal make sure that the power has been turned off. The hinged return air grille panel must be opened. The energy recovery ventilator (QERV) can be seen after the panel is opened. To gain access to the mist eliminator, the QERV must be removed. Refer to Figure 10

1. The front fill plate of the QERV must be removed. There is one screw on either side of the plate. Remove these screws and remove the plate.
2. On either side of the QERV there are mounting screws that hold the QERV in place. Remove both of these screws.
3. Underneath the heat recovery cassette there is a power connector for the lower blower assembly. To disconnect this plug, the tabs on both sides of the plug must be squeezed to release the plug. While squeezing the tabs, pull the plug out of the socket.
4. The QERV is plugged into the unit on the right side of the unit. Both of these plugs must be disconnected to remove the QERV. Squeeze the tabs on the sides of the connector and pull straight out.
5. Slide the QERV assembly straight out of the unit being careful not to let the cassette slide out of the QERV.

The mist eliminator can be seen through the opening in the back of the unit. The mist eliminator must be raised up and the bottom can be pulled toward the front of the unit and removed.

FIGURE 10
REMOVAL OF THE QTEC ENERGY RECOVERY VENTILATOR

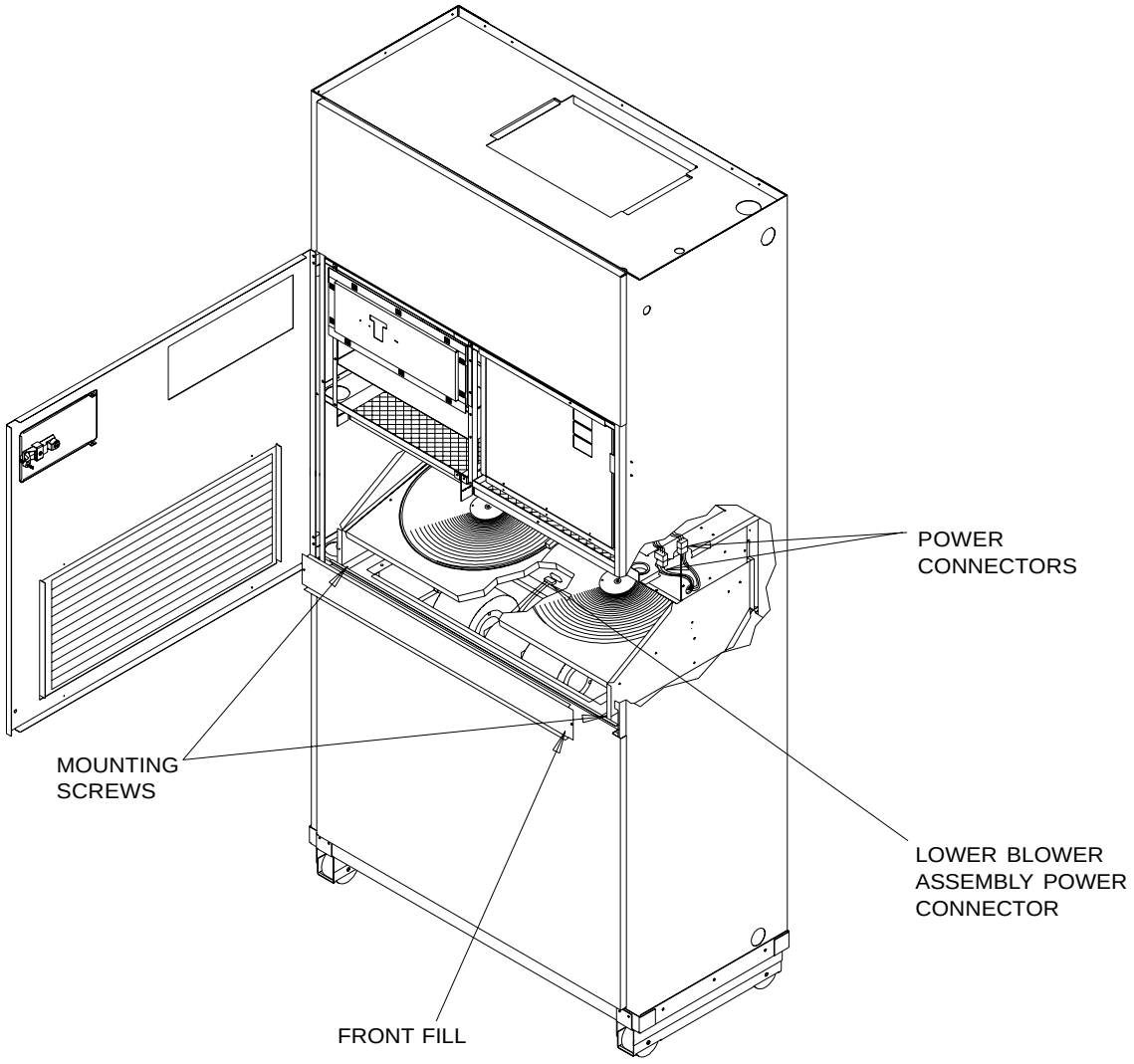

MOUNTING THE UNIT

When installing a QW unit near an interior wall on the left side, a minimum of 8 inches is required; 12 inches is preferred.

When installing a QW unit near an interior wall on the right side, a minimum of 12 inches is required as additional space is required to connect the drain.

This clearance is required to allow for the attachment of the unit to the wall mounting brackets and the side trim pieces to the wall.

This unit is to be secured to the wall when there is not a vent sleev used with the wall mounting brackets provided. *(NOTE: Wall mounting brackets are only shipped on units with no vent inside.)* The unit itself, the supply duct, and the free blow plenum are suitable for "0" clearance to combustible material.

NOTE: When a wall sleeve is to be used attach the unit to the sleeve with bracket supplied with the wall sleeve.

Following are the steps for mounting the QW units for reference see Figure 12 on page 14.

1. Attach wall mounting bracket to the structure wall with field supplied lag bolts. The fluid piping connections are to be within the confines of this bracket. See Figure 1 for cabinet openings and location of fluid coil connection points.
2. Position the unit in front of the wall mounting bracket.
3. Remove the locking screws from the wheels. Refer to Figure 11.
4. Roll the unit up to the wall mounting bracket. The unit must be level from side to side. If any adjustments are necessary, shim up under the rollers with sheets of steel or any substance that is not affected by moisture.
5. Secure the unit to the wall bracket with provided #10 hex head sheet metal screws. There are prepunched holes in the cabinet sides, and the bracket has slotted holes to allow for some misalignment.
6. Position the bottom trim piece to the unit and attach with provided screws (dark colored).
7. Position side trim pieces to the wall and attach with field supplied screws. There are two long and two short pieces supplied. The long pieces are to enclose the gap behind the unit. The short pieces are to fill the gap behind the cabinet extension or the free blow plenum box. They may be cut to suit the ceiling height or overlap the unit side trim. There is sufficient length to trim up to a 10'2" ceiling.

FIGURE 11
REMOVING LOCKING SCREWS FROM WHEELS

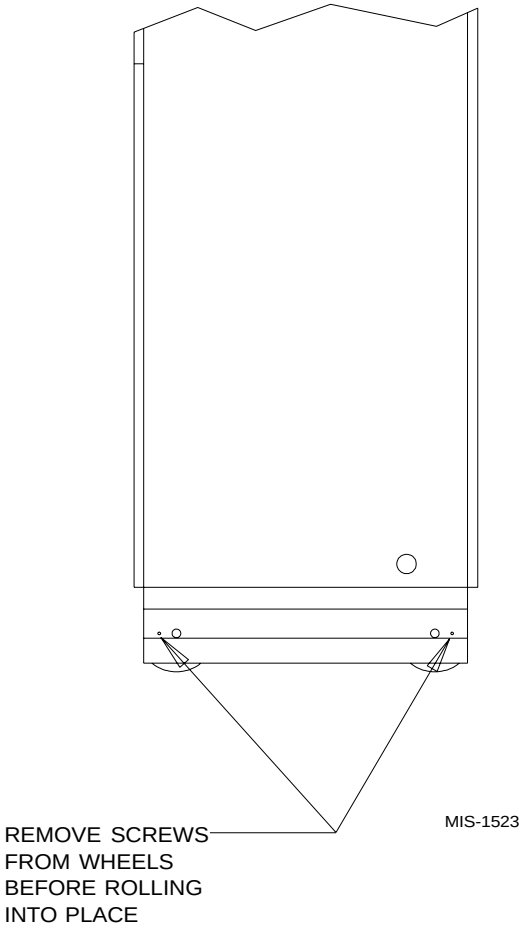

FIGURE 12
UNIT MOUNTING WITHOUT VENTILATION WALL SLEEVE
(REFER TO MOUNTING INSTRUCTIONS ON PAGE 13)

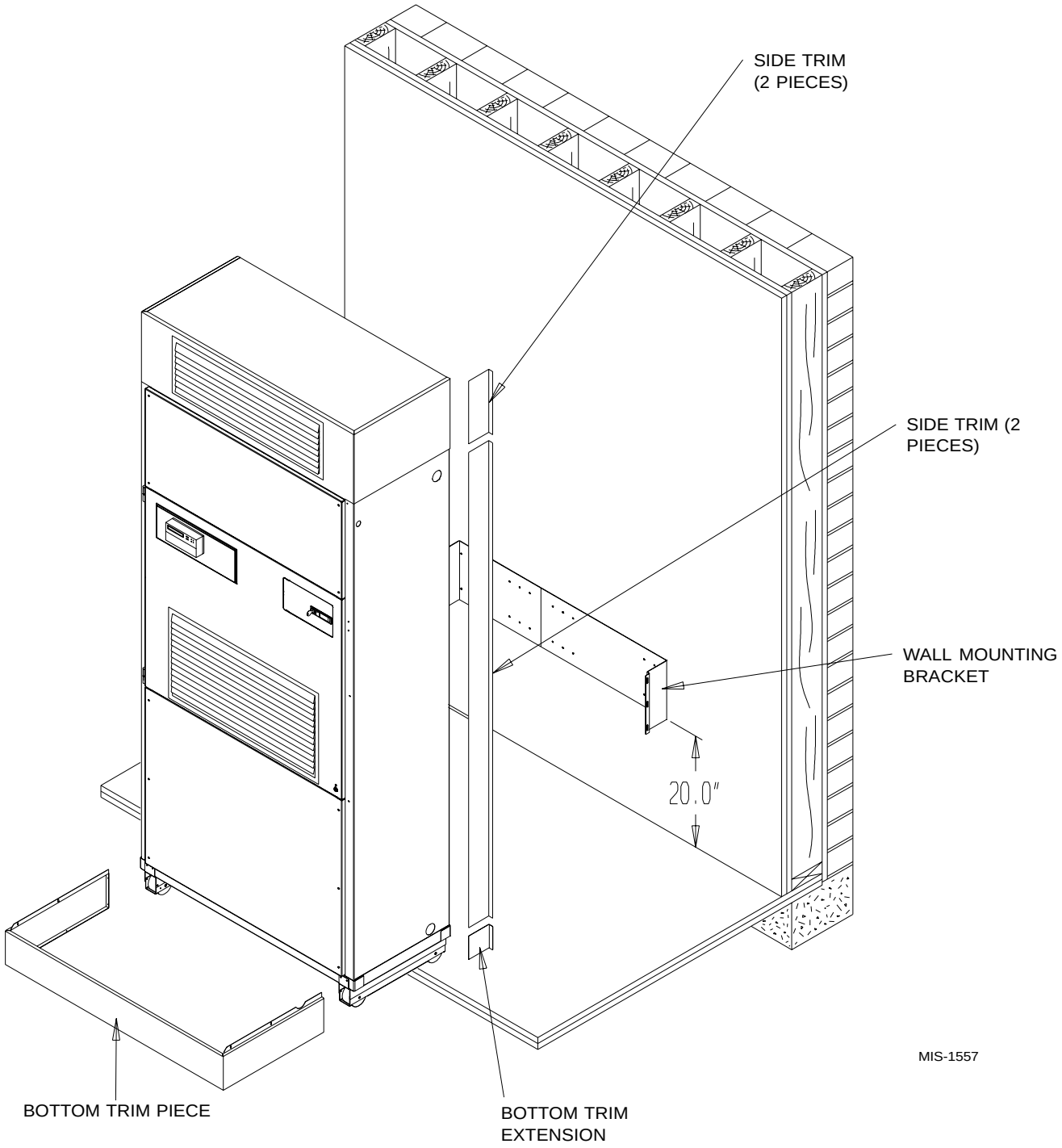

FIGURE 13
COMPONENT LOCATION

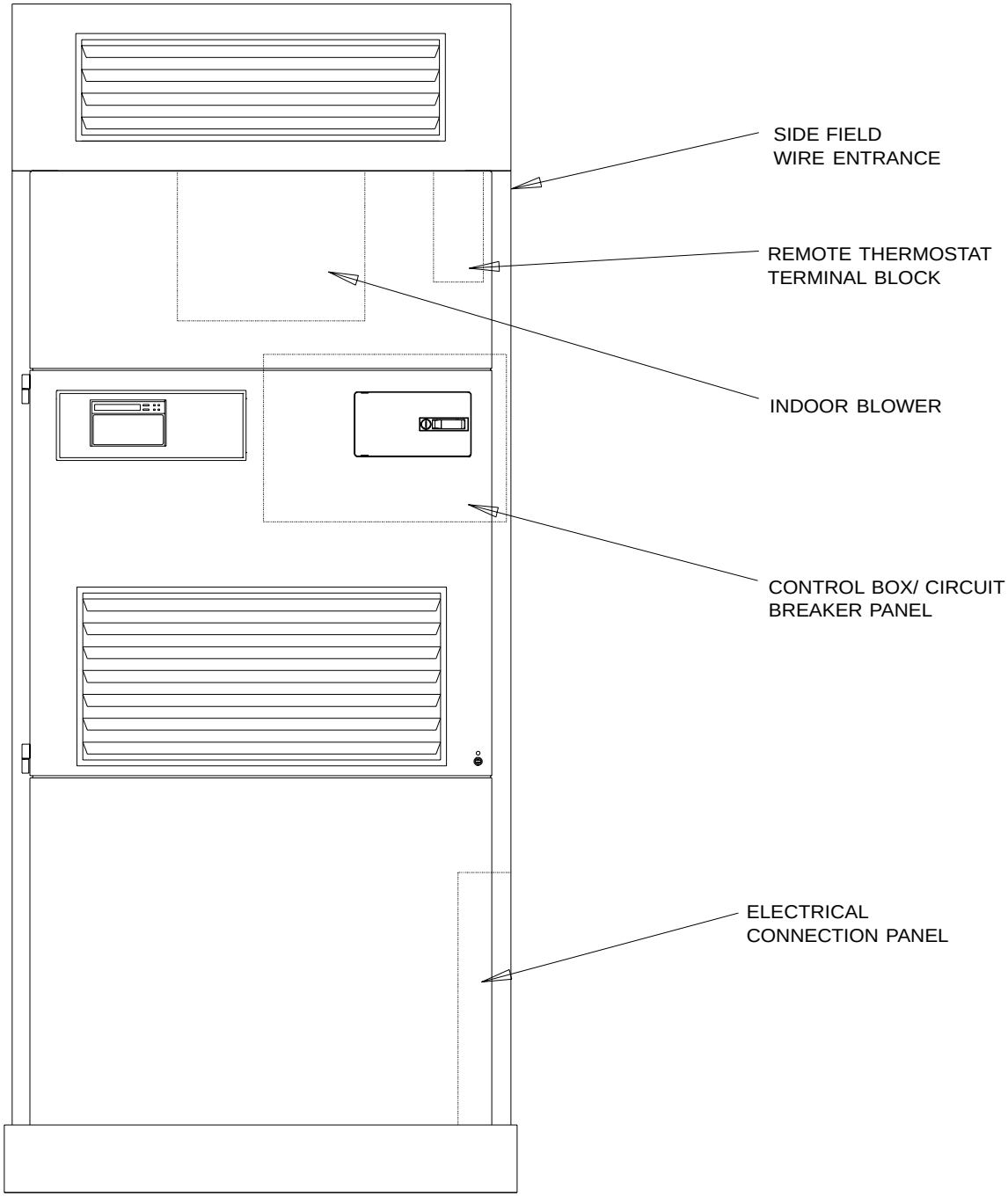

MIS-1556

WIRING – MAIN POWER

Refer to the unit rating plate and/or Table 2 for wire sizing information and maximum fuse or "HACR Type" circuit breaker size. Each unit is marked with a "Minimum Circuit Ampacity". This means that the field wiring used must be sized to carry that amount of current. Depending on the installed KW of electric heat, there may be two field power circuits required. If this is the case, the unit serial plate will so indicate. All models are suitable only for connection with copper wire. Each unit and/or wiring diagram will be marked "Use Copper Conductors Only". These instructions ***must be*** adhered to. Refer to the National Electrical Code (NEC) for complete current carrying capacity data on the various insulation grades of wiring material. All wiring must conform to NEC and all local codes.

The electrical data lists fuse and wire sizes (75° C copper) for all models, including the most commonly used heater sizes. Also shown are the number of field power circuits required for the various models with heaters.

The unit rating plate lists a "Maximum Time Delay Relay Fuse" or "HACR Type" circuit breaker that is to be used with the equipment. The correct size must be used for proper circuit protection, and also to assure that there will be no nuisance tripping due to the momentary high starting current of the compressor motor.

The disconnect access door on this unit may be locked to prevent unauthorized access to the disconnect.

The field wiring connections are located behind the top panel in the circuit breaker panel. The return air panel must be removed first. This panel is equipped with a door switch which shuts the unit down when it is removed. The filter rack must be removed next.

WIRING – LOW VOLTAGE WIRING

230/208V, 1 PHASE AND 3 PHASE EQUIPMENT DUAL PRIMARY VOLTAGE TRANSFORMERS

All equipment leaves the factory wired on 240V tap. For 208V operation, reconnect from 240V to 208V tap. The acceptable operating voltage range for the 240 and 208V taps are as noted in Table 2.

TABLE 2
OPERATING VOLTAGE RANGE

TAP	RANGE
240V	253 - 216
208V	220 - 187

NOTE: The voltage should be measured at the field power connection point in the unit and while the unit is operating at full load (maximum amperage operating condition).

The standard Climate Control ***Option X*** is a remote thermostat connection terminal block. See Figure 17 for wiring diagram. Compatible thermostats are listed in Table 3.

The Climate Control ***Option A*** is an electronic, non-programmable manual or auto changeover thermostat. The subbase of the thermostat is factory wired to the front panel of the unit. Compatible for use with Bard CS2000 Controller and Energy Recovery Ventilator.

The Climate Control ***Option D*** is an electronic, programmable thermostat. The subbase of the thermostat is factory wired to the front panel of the unit. Compatible for use with Energy Recovery Ventilator or Economizer.

TABLE 3
WALL THERMOSTATS AND SUBBASE COMBINATIONS

Thermostat	Subbase	Predominant Features
8404-017 (T874R1129)	8404-009 (Q6741261)	Heat or Cool No Auto
8403-018 (T874N2024)	8404-010 (Q6741261)	Automatic Heat / Cool Changeover Position
8403-042 (T8511G1070)	N/A	Manual / Auto / Heat / Cool Non-Programmable Electronic
5403-034 (IF94-80)	N/A	Manual / Auto / Heat / Cool Programmable Electronic

LOW VOLTAGE CONNECTIONS

These units use a grounded 24 volt AC low voltage circuit.

The *"R"* terminal is the *hot* terminal and the *"C"* terminal is *grounded.*

"G" terminal or pins 6 and 1 of P2 are the *fan inputs*. ***Both must be energized*** for proper fan operation. This is done automatically in the factory installed climate control options. If the climate control option is abandoned and connections are made directly to P2 both pins 6 and 1 of P2 must be energized for proper operation.

"Y" terminal or pin 7 of P2 is the *compressor input*.

"B" terminal or pin 8 of P2 is the *reversing valve input*. The reversing valve must be energized for heating mode.

"R" terminal or pin 10 of P2 is *24 VAC hot*.

"C" terminal or pin 11 of P2 is *24 VAC grounded.*

"L" terminal or pin 12 of P2 is *compressor lockout* **output**. This terminal is activated on a high or low pressure trip by the compressor control module. This is a 24 VAC output.

"W2" terminal or pin 9 of P2 is *second stage heat* (if equipped). If the unit is equipped with an optional hot water coil plenum box the water valve will be connected to this terminal.

"O1" terminal of pin 5 of P2 is the *ventilation input*. This terminal energizes any factory installed ventilation option.

LOW VOLTAGE CONNECTIONS FOR DDC CONTROL

Fan Only	Energize G
Cooling Mode	Energize Y, G
Heat Pump Heating	Energize Y, G, B
2nd Stage Heating (if employed)	Energize G, W2
Ventilation	Energize G, O1

FIGURE 14
BLOWER MOTOR LOW VOLTAGE WIRE HARNESS PLUG

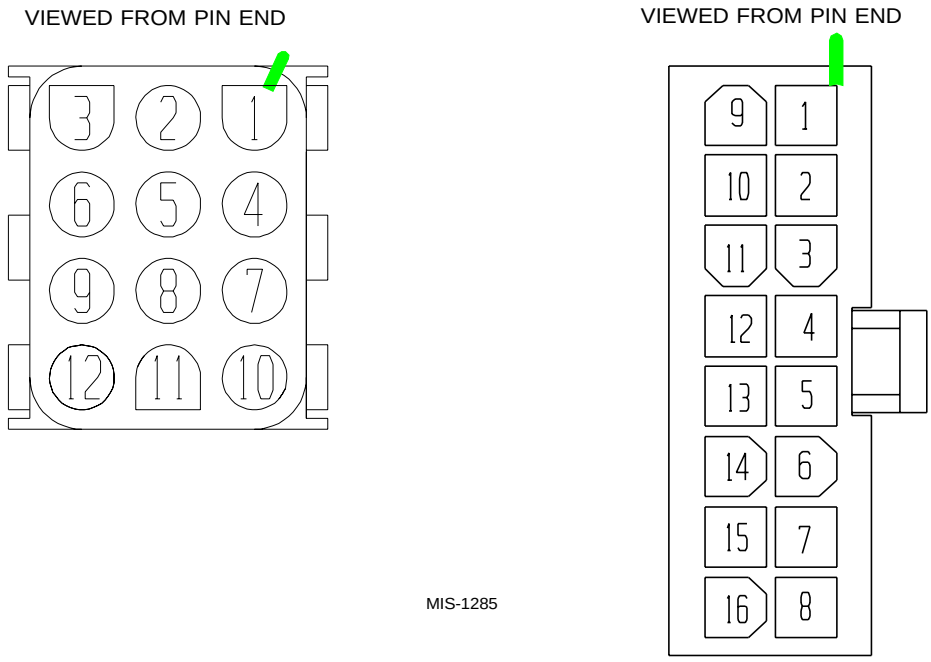

FIGURE 15
REMOTE THERMOSTAT WIRING DIAGRAM
"X" OPTION

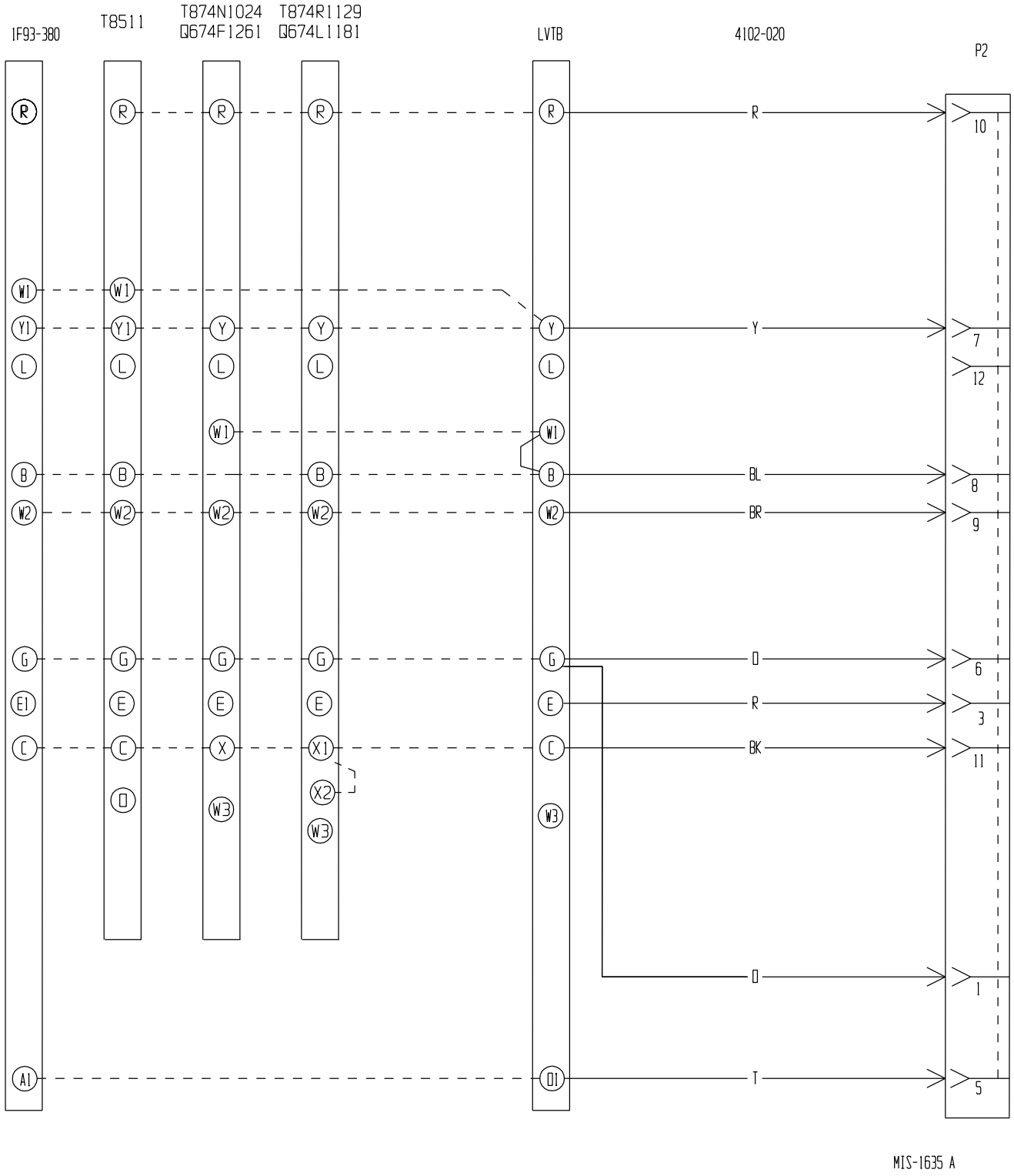

FIGURE 16
REMOTE THERMOSTAT WIRING DIAGRAM
"A" THERMOSTAT OPTION

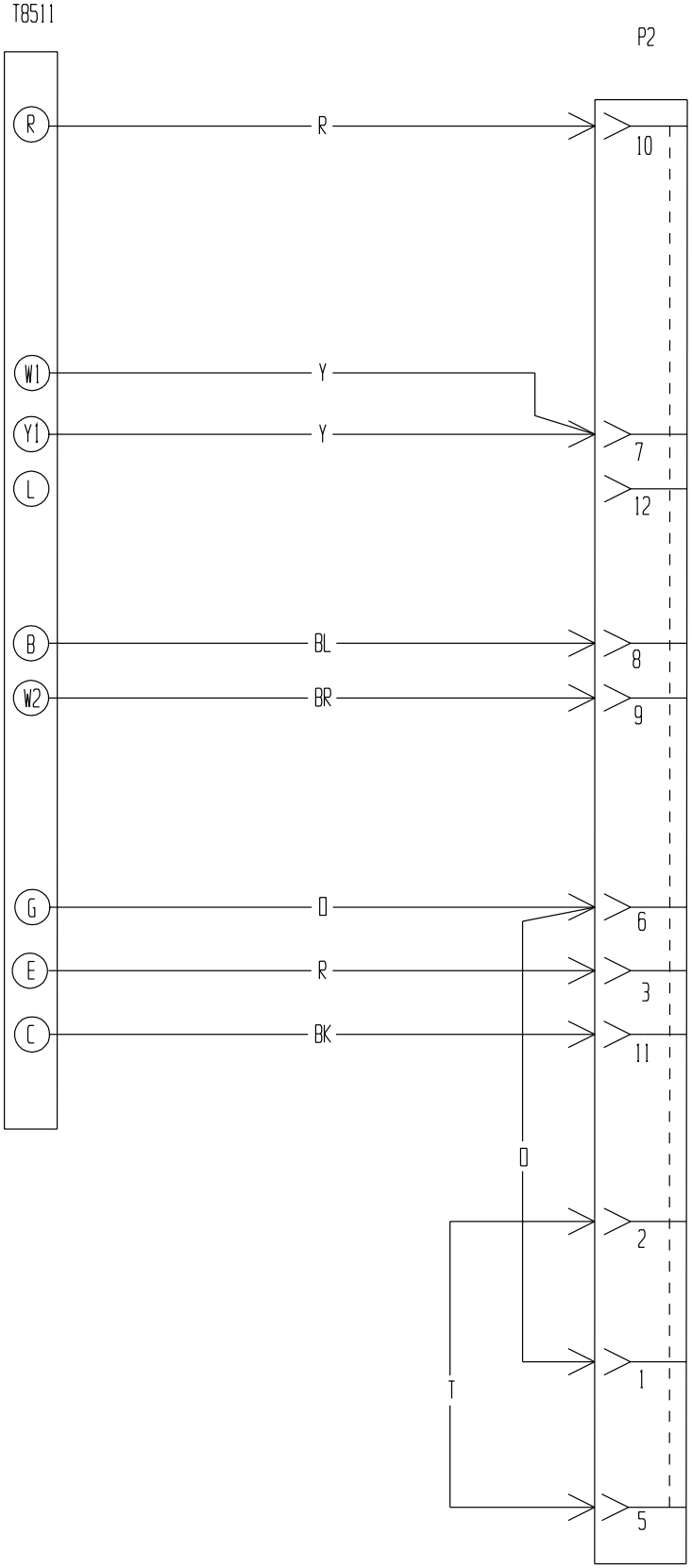

4102-021A

FIGURE 17
REMOTE THERMOSTAT WIRING DIAGRAM
"D" THERMOSTAT OPTION

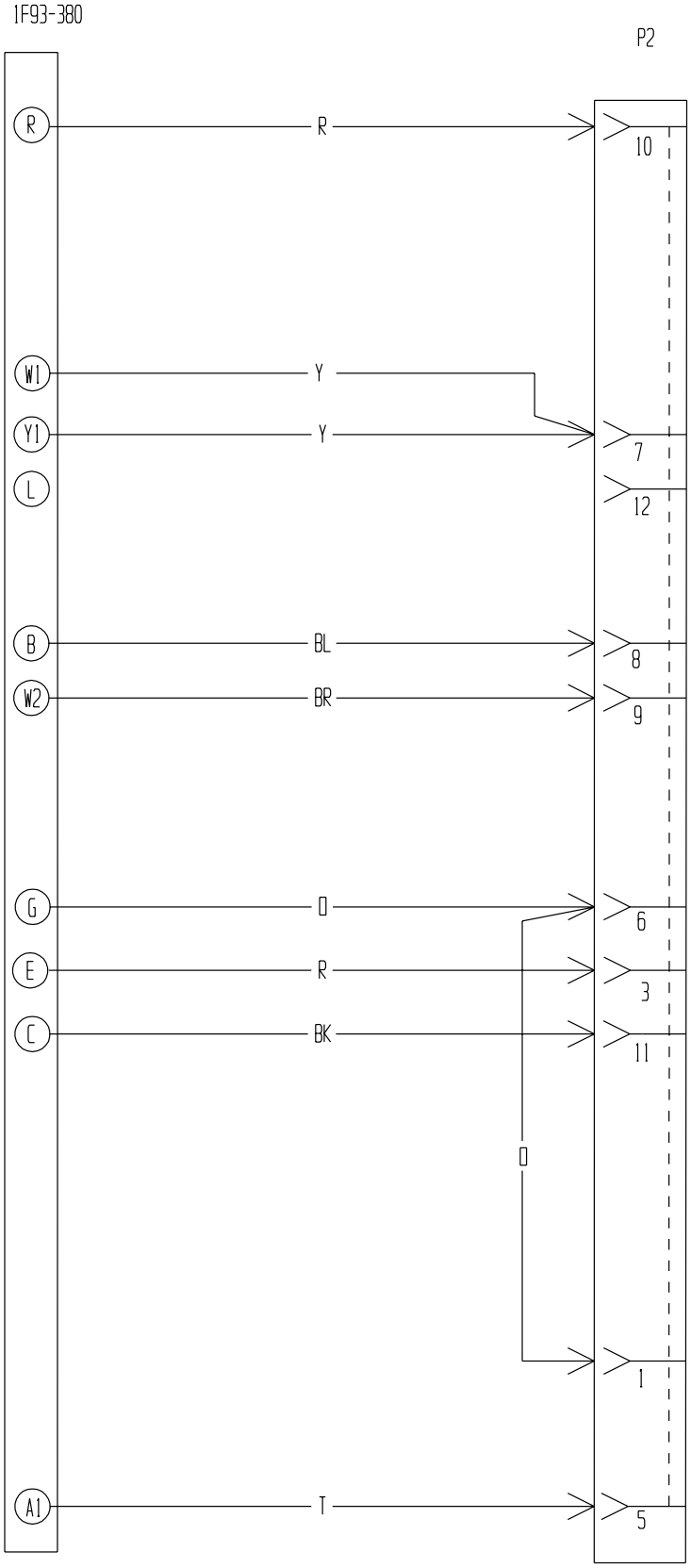

4102-022C

START UP

DESCRIPTION OF STANDARD EQUIPMENT

LOW PRESSURE SWITCH

NOTE: This unit is supplied with two low pressure switches installed, a 15 PSIG and a 27 PSIG.

The 27 PSIG is wired into the system. This switch is suitable for ground water (pump and dump), and water loop (boiler/tower applications).

To avoid nuisance lockouts for ground loop application with antifreeze, the 27 PSIG switch should be disconnected and connect the 15 PSIG switch.

The leads for both switches are located in the lower electrical connection panel. The switch bodies are marked with pressure settings. The 27 PSIG switch has yellow leads. The 15 PSIG switch has blue leads.

HIGH PRESSURE SWITCH

This unit is equipped with a high pressure switch that will stop the compressor in the event of abnormal high pressure occurrences.

The high and low pressure switches are included in a lockout circuit that is resettable from the room thermostat.

COMPRESSOR CONTROL MODULE

The compressor control module is optional on the models covered by this manual. The compressor control is an anti-short cycle/lockout timer with high and low pressure switch monitoring and alarm relay output.

ADJUSTABLE DELAY ON MAKE AND BREAK TIMER

On initial power up or any time power is interrupted to the unit the *delay on make* period begins which will be 2 minutes plus 10% of the *delay on break* setting. When the delay on make is complete and the high pressure switch (and low pressure switch, if employed) is closed, the compressor contactor is energized. Upon shutdown the delay on break timer starts and prevents restart until the delay on break and delay on make periods have expired.

During routine operation of the unit with no power interruptions the compressor will operate on demand with no delay.

HIGH PRESSURE SWITCH AND LOCKOUT SEQUENCE

If the high pressure switch opens, the compressor contactor will de-energize immediately. The lockout timer will go into a *soft lockout* and stay in soft lockout until the high pressure switch closes ***and*** the delay on break time has expired. If the high pressure switch opens again in the same operating cycle the unit will go into *manual lockout* condition and the alarm relay circuit will energize. Recycling the wall thermostat resets the manual lockout.

LOW PRESSURE SWITCH, BYPASS AND LOCKOUT SEQUENCE

If the low pressure switch opens for more than 120 seconds, the compressor contactor will de-energize and go into a soft lockout. Regardless the state of the low pressure switch, the contactor will reenergize after the delay on make time delay has expired. I the low pressure switch remains open, of opens again for longer than 120 seconds the unit will go into manual lockout condition and the alarm relay circuit will energize. Recycling the wall thermostat resets the manual lockout.

ALARM RELAY OUTPUT

Alarm terminal is output connection for applications where alarm relay is employed. This terminal is powered whenever compressor is locked out due to HPC or LPC sequences as described.

Note: Both high and low pressure switch controls are inherently automatic reset devices. The high pressure switch and low pressure switch cut out and cut in settings are fixed by specific air conditioner or heat pump unit model. The lockout feature, both soft and manual, are a function of the Compressor Control Module.

ADJUSTMENTS

ADJUSTABLE DELAY ON MAKE AND DELAY ON BREAK TIMER

The potentiometer is used to select delay on break time from 30 seconds to 5 minutes. Delay on Make (DOM) timing on power up and after power interruptions is equal to 2 minutes plus 10% of Delay on Break (DOB) setting. See Delay on Make Timing chart on page 22.

During routine operation of the unit with no power interruptions the compressor will operate on demand with no delay.

DELAY ON MAKE TIMING			
.05 minutes	(30 seconds)	DOB	= 123 seconds DOM
1.0 minutes	(60 seconds)	DOB	= 126 seconds DOM
2.0 minutes	(120 Seconds)	DOB	= 132 seconds DOM
3.0 minutes	(180 seconds)	DOB	= 138 seconds DOM
4.0 minutes	(240 seconds)	DOB	= 144 seconds DOM
5.0 minutes	(300 seconds)	DOB	= 150 seconds DOM

OPTIONAL CFM

This option is not available for QW241 or QW301.

These units are shipped from the factory set to operate at the optional CFM level shown in Table 4. This provides lower operating sound levels for non-ducted, free discharge applications. This CFM level will reduce the system capacity performance by approximately 2% at the same energy efficiency.

Rated CFM is required for ducted applications for maximum performance rating. To obtain full CFM on these models, connect jumper wire as follows:

1. Disconnect all power to the unit. Failure to do so may result in damage to the motor.
2. Open hinged return air grille panel
3. Open control panel cover.
4. Locate low voltage terminal strip. there is a pink jumper wire with both ends attached to terminal marked “G2”. Move one end of this jumper to terminal “Y”.
5. Reverse steps to reassemble.

IMPORTANT INSTALLER NOTE

For improved start up performance, wash the indoor coil with dishwashing detergent.

PHASE MONITOR

All units with three phase scroll compressors are equipped with a three phase line monitor to prevent compressor damage due to phase reversal.

The phase monitor in this unit is equipped with two LEDs. If the Y signal is present at the phase monitor and phases are correct, the green LED will light and contactor will energize. If phases are reversed, the red fault LED will be lit and compressor operation is inhibited.

If a fault condition occurs, reverse two of the supply leads to the unit. Do not reverse any of the unit factory wires as damage may occur.

SERVICE HINTS

1. Caution user to maintain clean air filters at all times. Also, not to needlessly close off supply air registers. This may reduce air flow through the system which shortens equipment service life as well as increasing operating costs and noise levels.
2. The heat pump wall thermostats perform multiple functions. Be sure that all function switches are correctly set for the desired operating mode before trying to diagnose any reported service problems.

SEQUENCE OF OPERATION

COOLING – Circuit R-Y makes the thermostat pull in the compressor contactor starting the compressor. The G (indoor motor) circuit is automatically completed on any call for cooling operation, or can be energized by manual fan switch on subbase for constant air circulation.

HEATING – A 24V solenoid coil on reversing valve controls heating cycle operation. Two thermostat options, one allowing "Auto" change over from cycle to cycle and the other constantly energizing solenoid coil during heating season and thus eliminating pressure equalization noise, are to be used. On "Auto" option, a circuit is completed for R-W1 and R-Y on each heating "on" cycle, energizing reversing valve solenoid and pulling in compressor contactor starting compressor. R-G also makes starting indoor blower motor. Heat pump heating cycle now in operation.

The second option has no "Auto" change over position, but instead energizes the reversing valve solenoid constantly whenever the system switch on subbase is placed in "Heat" position, the "B" terminal being constantly energized from R. A thermostat demand for heat completes R-Y circuit pulling in compressor contactor starting compressor. R-G also make starting indoor blower motor.

PRESSURE SERVICE PORTS

High and low pressure service ports are installed on all units so that the system operating pressures can be observed. Pressure charts can be found later in the manual covering all models on both cooling and heating cycles. It is imperative to match the correct pressure chart to the unit by model number. All service doors must be attached to obtain proper reading. The service ports are located behind the center door on the left hand side of the unit above the air filters.

TABLE 4
INDOOR BLOWER PERFORMANCE

MODEL	RATED ESP	① MAX. ESP	② RATED CFM	③ OPTIONAL CFM	④ CONTINUOUS CFM	CFM @ MAX. ESP
QW242	0.0	0.5	800	N/A	800	700
QW302	0.0	0.8	1000	N/A	1000	910
QW361	0.0	0.8	1200	1000	1000	1175
QW421	0.0	0.8	1200	1000	1000	1175
QW481	0.0	0.8	1400	1100	1100	1175
QW601	0.0	0.8	1550	1250	1250	1400

NOTE: These units are equipped with a variable speed (ECM) indoor motor that automatically adjusts itself to maintain approximately the same rate of indoor air flow in both heating and cooling, dry and wet coil conditions, and at both 230/208 or 460 volts.

① Maximum ESP (inches WC) shown is with 1" thick disposable filter (reduced by .2 for 2" filter).
② Rated CFM for ducted applications – required for maximum performance rating. To obtain full CFM on models QW361, QW421, QW481 and QW601 locate low voltage terminal strip in the circuit breaker box. There is a pink jumper wire with both ends attached to terminal marked "G2". Move one end of the jumper to terminal "Y".
③ Optional CFM – the unit is shipped from the factory set to operate at the optional CFM level shown. This provides lower operating sound levels for non-ducted, free discharge applications. This reduces system capacity performance by approximately 2% at the same energy efficiency.
④ Continuous fan CFM is the total air being circulated during continuous fan mode.

FIGURE 18
FLUID CONNECTIONS ON UNIT WITH VENTILATION WALL SLEEVE

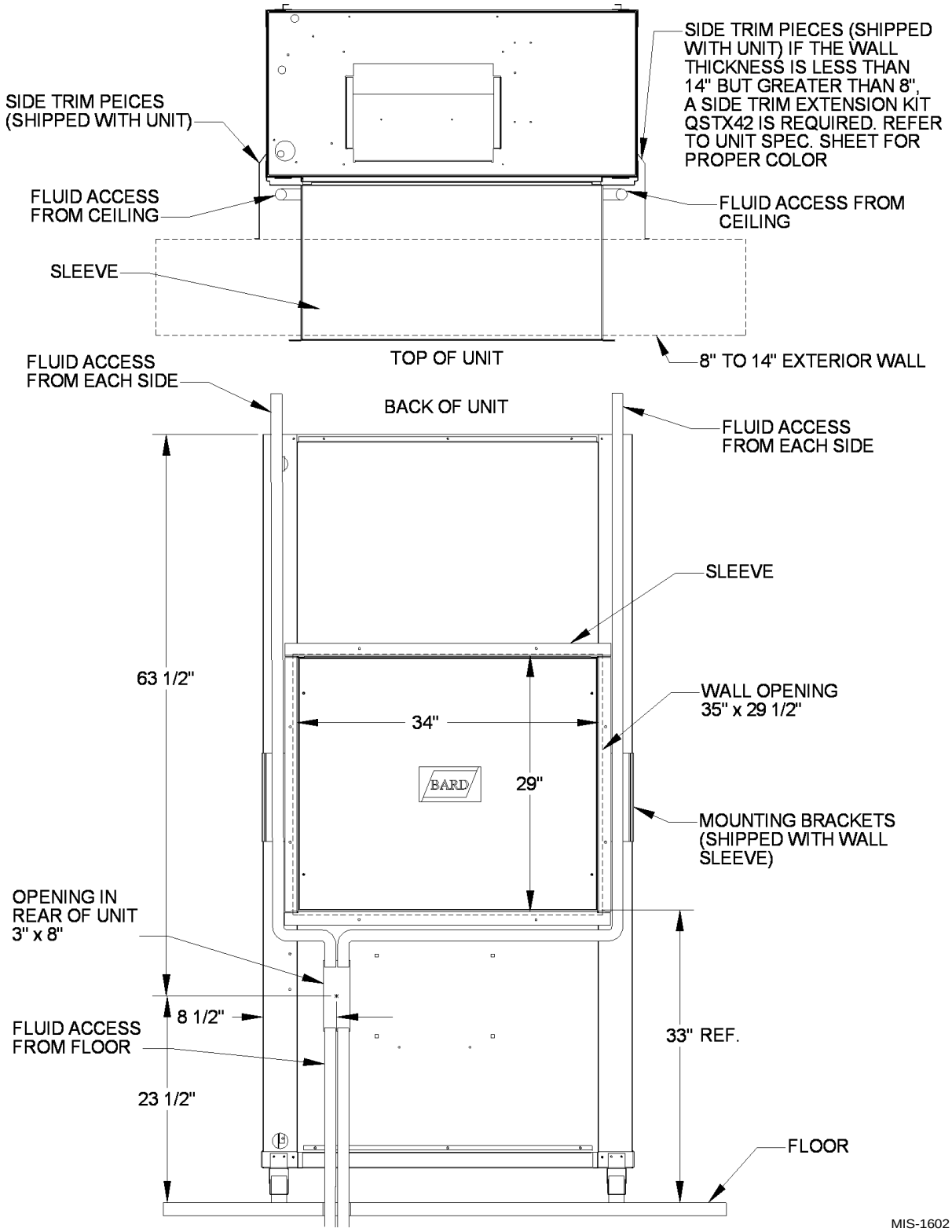

FIGURE 19
FLUID CONNECTIONS ON UNIT WITHOUT VENTILATION WALL SLEEVE

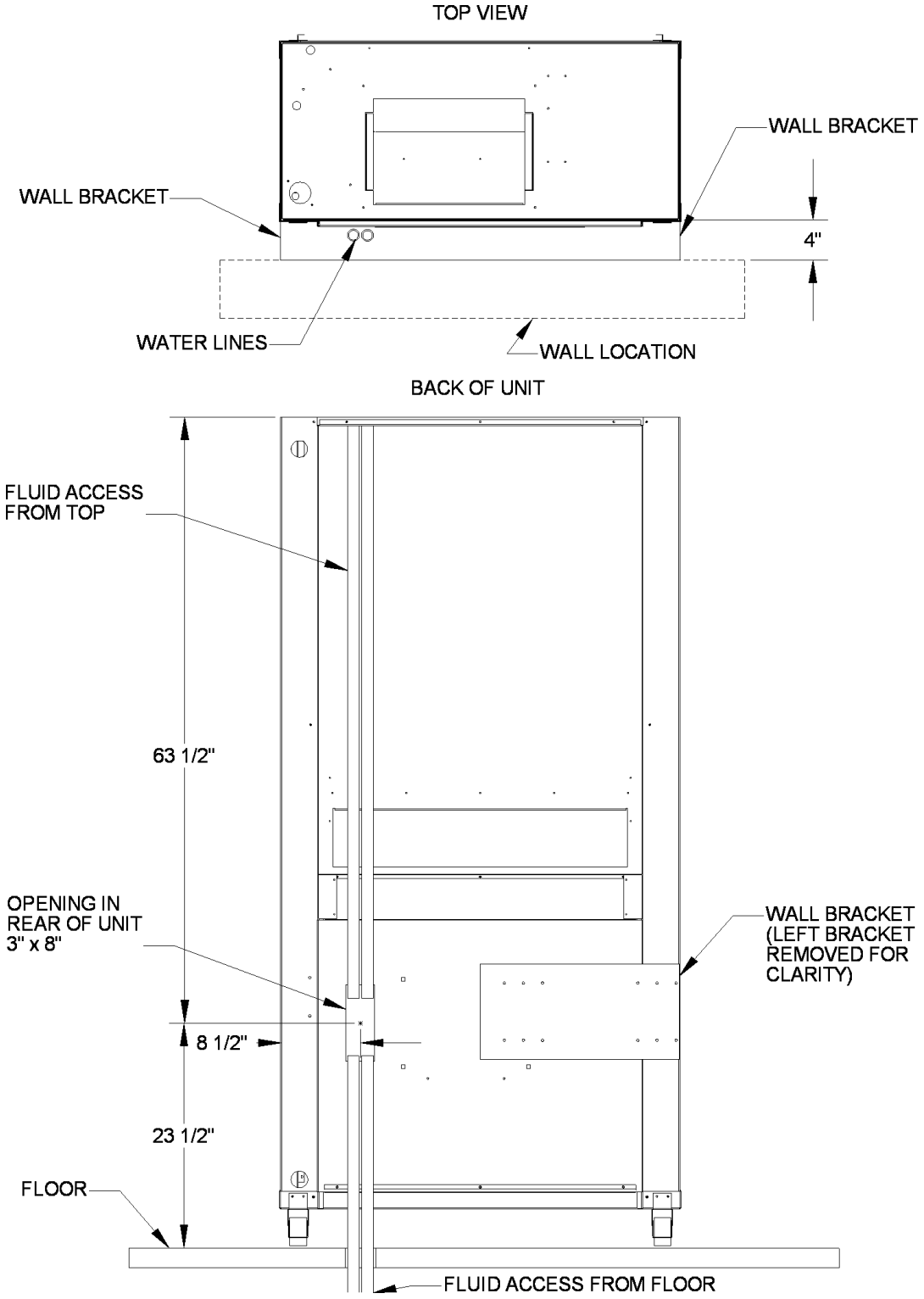

MIS-1601

TABLE 5
PRESSURE TABLE

COOLING

Fluid Temperature Entering Water Coil Degree F

Model	Return Air Temperature	Pressure	45	50	55	60	65	70	55	80	85	90	95	100	105	110
QW242	75/62	Low Side	68	68	68	69	69	69	70	70	71	71	71	72	72	72
		High Side	127	136	145	155	167	178	191	206	220	236	253	270	289	308
	80/67	Low Side	73	73	73	74	74	74	75	75	76	76	76	77	77	77
		High Side	130	139	149	159	171	183	196	211	226	242	259	277	296	316
	85/72	Low Side	76	76	76	77	77	77	78	78	79	79	79	80	80	80
		High Side	135	144	154	165	177	189	203	218	234	250	268	287	306	327
QW302	75/62	Low Side	62	63	65	66	68	69	71	72	74	75	76	77	78	79
		High Side	122	134	146	158	172	184	198	212	225	240	254	269	284	299
	80/67	Low Side	66	67	69	71	73	74	76	77	79	80	81	82	83	85
		High Side	125	137	150	162	176	189	203	217	231	246	261	276	291	307
	85/72	Low Side	68	69	71	73	75	77	79	80	82	83	84	85	86	88
		High Side	129	142	155	168	182	196	210	225	239	255	270	286	301	318
QW361	75/62	Low Side	67	68	69	69	70	71	71	72	72	73	73	74	74	75
		High Side	119	129	140	151	164	176	190	204	219	234	251	267	285	302
	80/67	Low Side	72	73	74	74	75	76	76	77	77	78	78	79	79	80
		High Side	122	132	144	155	168	181	195	209	225	240	257	274	292	310
	85/72	Low Side	76	76	77	77	78	79	79	80	80	81	81	82	82	83
		High Side	126	137	149	160	174	187	202	216	233	248	266	284	302	321
QW421	75/62	Low Side	61	63	65	65	67	68	70	71	72	73	74	75	75	76
		High Side	125	135	144	154	166	178	191	205	219	235	252	269	288	306
	80/67	Low Side	65	67	69	70	72	73	75	76	77	78	79	80	80	81
		High Side	128	138	148	158	170	183	196	210	225	241	258	276	295	314
	85/72	Low Side	67	69	71	72	75	76	78	79	80	81	82	83	83	84
		High Side	132	143	153	164	176	189	203	217	233	249	267	286	305	325
QW481	75/62	Low Side	73	75	77	79	82	84	88	91	94	97	101	105	109	113
		High Side	133	141	150	161	173	185	199	215	231	249	267	288	309	332
	80/67	Low Side	78	80	82	85	88	90	94	97	100	104	108	112	117	121
		High Side	136	145	154	165	177	190	204	220	237	255	274	295	317	340
	85/72	Low Side	81	83	85	88	91	93	97	100	104	108	112	116	121	125
		High Side	141	150	159	171	183	197	211	228	245	264	284	305	328	352
QW601	75/62	Low Side	63	63	62	62	62	63	63	64	65	65	66	67	69	71
		High Side	118	130	141	154	167	180	194	208	222	237	252	267	284	299
	80/67	Low Side	67	67	66	66	66	67	67	68	69	70	71	72	74	76
		High Side	121	133	145	158	171	185	199	213	228	243	258	274	291	307
	85/72	Low Side	69	69	68	68	68	69	69	70	71	72	73	75	77	79
		High Side	125	138	150	164	177	191	206	220	236	252	267	284	301	318

The data in the above pressure chart is based on the following flow rates:

FLOW RATE FOR VARIOUS FLUIDS	QW242	QW302	QW361	QW421	QW481	QW601
Flow rate required GPM fresh water	3	4	5	6	6	9
Flow rate required GPM 15% Sodium Chloride	4	6	7	8	8	11
Flow rate required GPM 25% GS4	4	6	7	8	8	11

TABLE 6
PRESSURE TABLE

HEATING

Fluid Temperature Entering Water Coil Degree F

Model	Return Air Temperature	Pressure	25	30	35	40	45	50	55	60	65	70	75	80
QW242	68	Low Side	40	41	43	44	45	46	47	48	49	50	51	51
		High Side	175	176	177	178	179	180	181	182	184	185	186	188
QW302	68	Low Side	35	39	43	47	51	56	61	67	73	79	85	92
		High Side	174	178	183	187	193	198	205	211	218	225	233	241
QW361	68	Low Side	36	38	41	45	49	54	59	66	72	80	88	97
		High Side	171	175	181	187	193	199	206	213	221	228	237	245
QW421	68	Low Side	33	37	41	45	50	55	60	65	71	77	84	90
		High Side	174	179	185	192	198	205	212	219	226	234	241	249
QW481	68	Low Side	31	35	39	43	47	52	56	62	67	73	79	85
		High Side	176	181	187	194	200	207	215	222	230	238	247	256
QW601	68	Low Side	33	37	42	46	51	56	62	67	73	79	86	93
		High Side	214	216	219	223	229	236	245	254	265	278	291	306

The data in the above pressure chart is based on the following flow rates:

FLOW RATE FOR VARIOUS FLUIDS	QW242	QW302	QW361	QW421	QW481	QW601
Flow rate required GPM fresh water	3	4	5	6	6	9
Flow rate required GPM 15% Sodium Chloride	4	6	7	8	8	11
Flow rate required GPM 25% GS4	4	6	7	8	8	11

TABLE 7
OPTIONAL ACCESSORIES

Optional Accessories – Must Be Used For Each Installation W/Ventilation Options

Ventilation Wall Sleeves:

QWVS42	Ventilation wall sleeve for walls up to 14 inches thick

Ventilation Outdoor Louver Grilles:

QLG-11	Clear Anodized Aluminum for vent option
QLG-21	Medium Bronze Anodized Aluminum for vent option
QLG-31	Dark Bronze Anodized Aluminum for vent option

Optional Accessories – For Ground Loop Installations

WGPM-1C	Single pump module for individual loop system. 22 feet of head @ 16 GPM. Installs inside QW unit. 230V 60 Hz – 1-Ph. Used with all models, including 460V. Connections are 1 inch FPT. Fully insulated cabinet.
WGPM-2C	Dual pump module for individual loop system. 44 feet of head @ 16 GPM. Installs inside QW unit. 230V 60 Hz – 1-Ph. Used with all models, including 460V. Connections are 1 inch FPT. Fully insulated cabinet.
WGRK-1	460 Volt relay kit. Required when installing a pump module in a 460 Volt.
WGHK-1	Hose kit for pump module installations. Connections are 1 inch MPT. Includes all parts for connection to pump module and PT adapter fittings.

Optional Accessories – Additional Items As Determined By Job Specifications

NOTE: The following accessory items must be selected so that the finish (color) is matched to the QW model that they will be used with.

Side Trim Extension Kits:
Required when wall thickness is less than 14 inches and works for walls down to 8 inches thick. Used in place of standard trim kit supplied with unit to cover the space between unit and wall.

					Unit Compatibility
QSTX42A-V	Platinum vinyl	QSTX42-A4	Gray paint		All Models

Free-Blow Plenum Boxes:

					Unit Compatibility
QPB42-V	Platinum vinyl	QPB42-4	Gray paint	Front supply, 4-way deflection grille	All Models
QPBS42-V	Platinum vinyl	QPBS42-4	Gray paint	Same as QPB42, plus 2-way defection grill on each side	All Models

Top Fill Systems for Finishing Plenum Boxes to Ceilings:

					Unit Compatibility
QPBX42-9-V	Platinum vinyl	QPBX42-9-4	Gray paint	Use with QPB42 or QPBS42 (adjusts to ceilings up to 9’ 6”)	All Models
QPBX42-10-V	Platinum vinyl	QPBX42-10-4	Gray paint	Use with QPB42 or QPBS42 (adjusts to ceilings up to 10’ 2”)	All Models

Cabinet Extensions for Ducted Applications:

					Unit Compatibility
QCX10A-V	Platinum vinyl	QCX10A-4	Gray paint	20” height (adjusts for ceilings up to 9’ 4”; add QPBX42-9 for 9’ 4” to 10’ finished ceiling heights)	All Models

Hot Water Coils with Plenum Boxes:

					Unit Compatibility
QPBHW42-F-V	Platinum vinyl	QPBHW42-F-4	Gray paint	Free-blow plenum box	All Models
QPBHW42-D-V	Platinum vinyl	QPBHW42-D-4	Gray paint	Ducted plenum box	All Models

NOTE: The same top fill system and cabinet extensions can be used with hot water coil plenum boxes as with standard plenum boxes.

CLOSED LOOP
(Earth Coupled Ground Loop Applications)

CIRCULATION SYSTEM DESIGN

Equipment room piping design is based on years of experience with earth coupled heat pump systems. The design eliminates most causes of system failure.

Surprisingly, the heat pump itself is rarely the cause. Most problems occur because designers and installers forget that a closed loop earth coupled heat pump system is ***not*** like a household plumbing system.

Most household water systems have more than enough water pressure either from the well pump of the municipal water system to overcome the pressure of head loss in 1/2 inch or 3/4 inch household plumbing. A closed loop earth coupled heat pump system, however, is separated from the pressure of the household supply and relies on a small, low wattage pump to circulate the water and antifreeze solution through the earth coupling, heat pump and equipment room components.

The small circulator keeps the operating costs of the system to a minimum. However, the performance of the circulator ***must*** be closely matched with the pressure of head loss of the entire system in order to provide the required flow through the heat pump. Insufficient flow through the heat exchanger is one of the most common causes of system failure. Proper system piping design and circulator selection will eliminate this problem

Bard supplies a work sheet to simplify head loss calculations and circulator selection. Refer to "Circulating Pump Work sheet" section in manual 2100-099.

COPPER WATER COIL APPLICATION

Copper water coils are available as a factory installed option. The unit model number will indicate the coil option as the next to last character; "X" is for standard coil constructed of Cupronickel material and "4" is fro a water coil constructed of copper.

The Cupronickel coil is suitable for all applications. **The copper coil is suitable for applications using ground loop and cooling tower only and is never to be used in an open well application.**

FIGURE 20
CIRCULATION SYSTEM

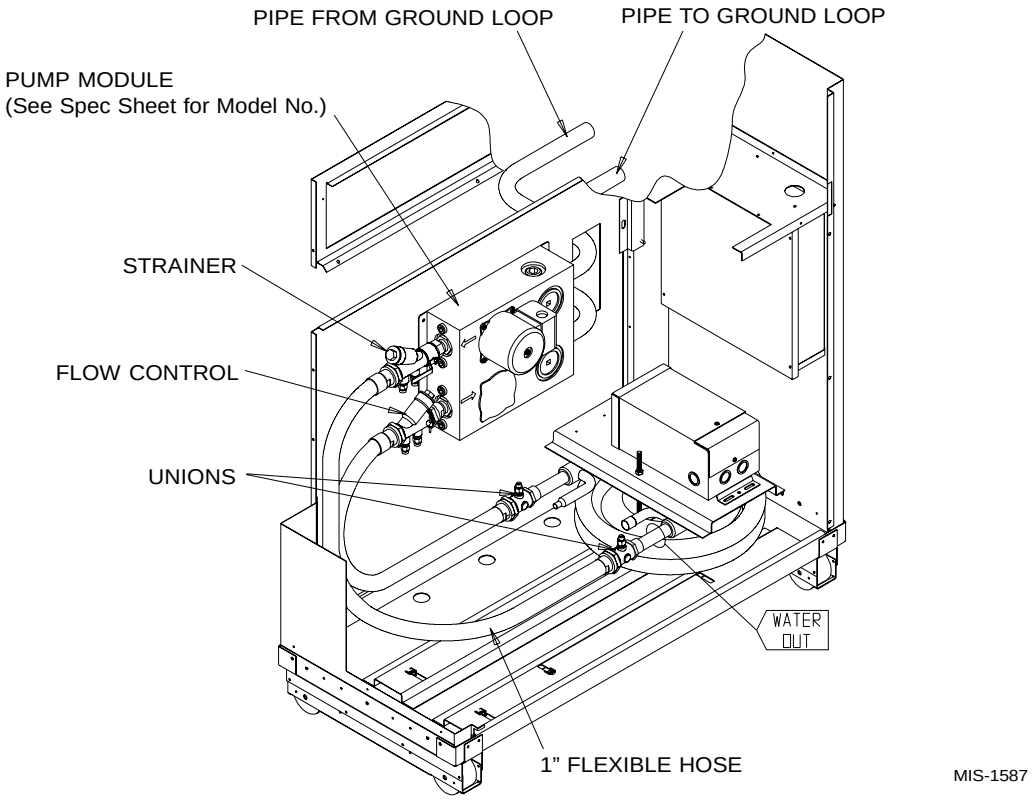

START UP PROCEDURE FOR CLOSED LOOP SYSTEM

1. Be sure main power to the unit is OFF at disconnect.
2. Set thermostat system switch to OFF, fan switch to AUTO.
3. Move main power disconnect to ON. Except as required for safety while servicing, ***Do not open the unit disconnect switch.***
4. Check system air flow for obstructions.

   A. Move thermostat fan switch to ON. Blower runs.

   B. Be sure all registers and grilles are open.

   C. Move thermostat fan switch to AUTO. Blowing should stop.
5. Flush, fill and pressurize the closed loop system as outlined in manual 2100-099.
6. Fully open the manual inlet and outlet valves. Start the loop pump module circulator(s) and check for proper operation. If circulator(s) are not operating, turn off power and diagnose the problem.
7. Check fluid flow using a direct reading flow meter or a single water pressure gauge, measure the pressure drop at the pressure/temperature plugs across the water coil. Compare the measurement with flow versus pressure drop table to determine the actual flow rate. If the flow rate is too low, recheck the selection of the loop pump module model for sufficient capacity. If the module selection is correct, there is probably trapped air or a restriction in the piping circuit.
8. Start the unit in cooling mode. By moving the thermostat switch to cool, fan should be set for AUTO.
9. Check the system refrigerant pressures against the cooling refrigerant pressure table in the installation manual for rated water flow and entering water temperatures. If the refrigerant pressures do not match, check for air flow problem then refrigeration system problem.
10. Switch the unit to the heating mode. By moving the thermostat switch to heat, fan should be set for AUTO.
11. Check the refrigerant system pressures against the heating refrigerant pressure table in installation manual. Once again, if they do not match, check for air flow problems and then refrigeration system problems.

    NOTE: If a charge problem is determined (high or low):

    A. Check for possible refrigerant leaks.

    B. Recover all remaining refrigerant from unit and repair leak.

    C. Evacuate unit down to 29 inches of vacuum

    D. Recharge the unit with refrigerant by weight. This is the only way to insure a proper charge.

FIGURE 21
WATER TEMPERATURE and PRESSURE PROCEDURE

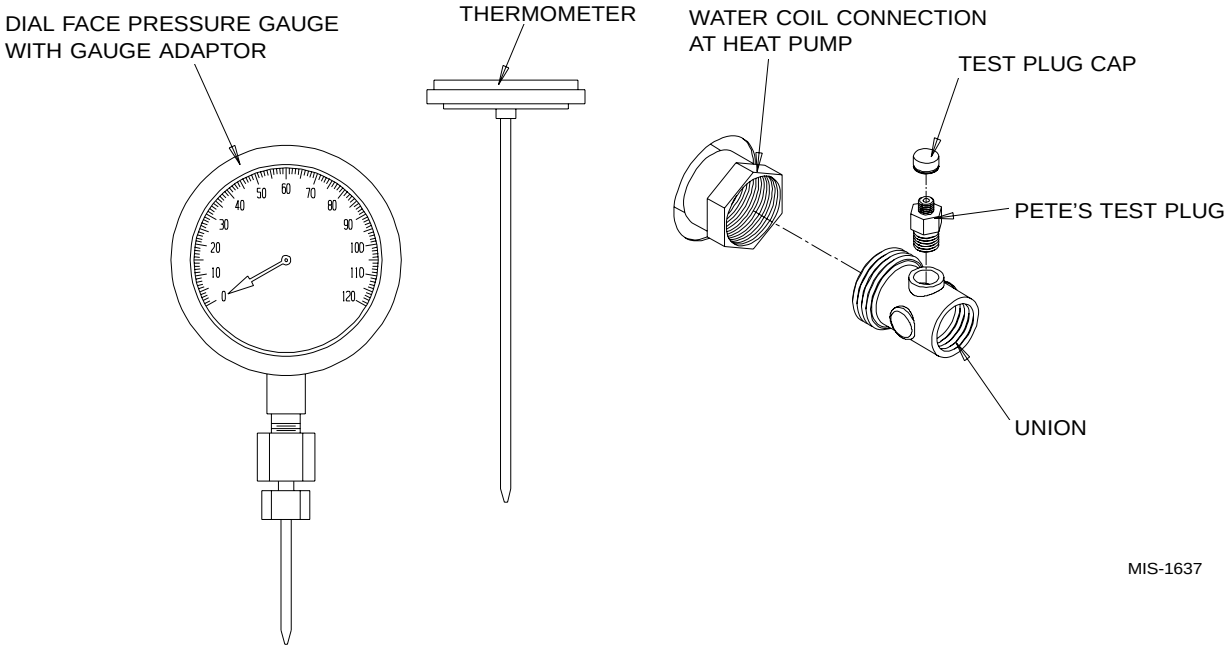

FIGURE 22
PERFORMANCE MODEL WGPM-1C LOOP PUMP MODULE

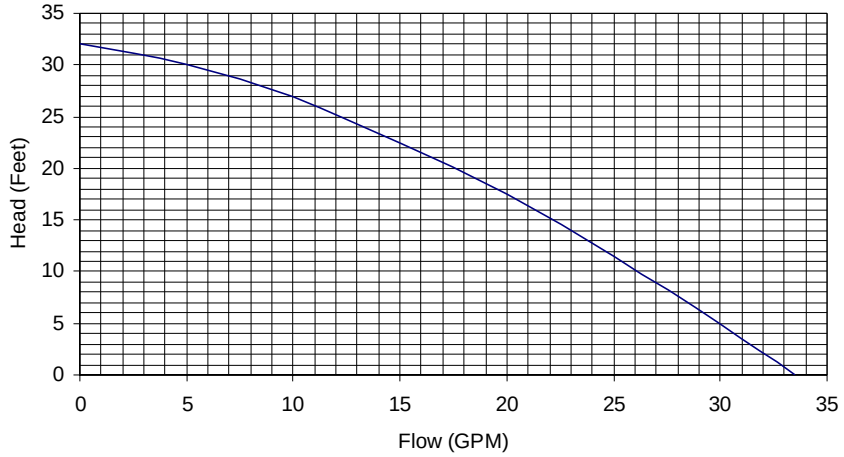

FIGURE 23
PERFORMANCE MODEL WGPM-2C LOOP PUMP MODULE

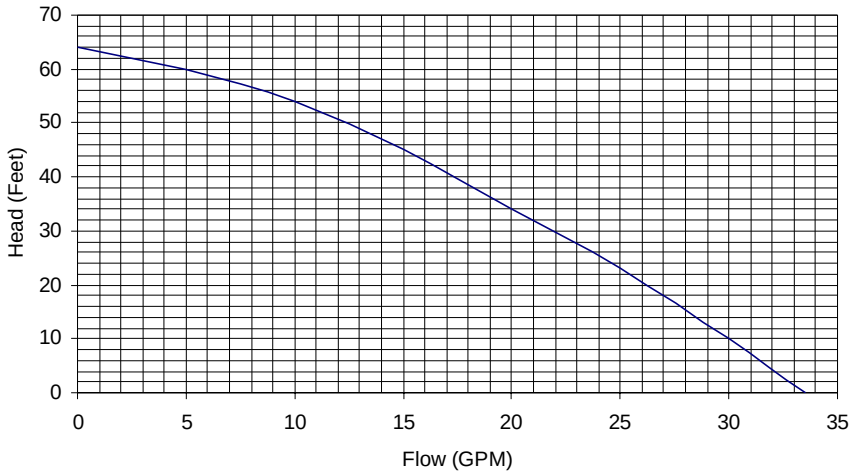

WATER CONNECTIONS

It is very important that an adequate supply of clean, noncorrosive water at the proper pressure be provided before the installation is made. Insufficient water, in the heating mode for example, will cause the low pressure switch to trip, shutting down the heat pump. In assessing the capacity of the water system, it is advisable that the complete water system be evaluated to prevent possible lack of water or water pressure at various household fixtures whenever the heat pump turns on. All plumbing to and from the unit is to be installed in accordance with local plumbing codes. The use of plastic pipe, where permissible, is recommended to prevent electrolytic corrosion of the water pipe. Because of the relatively cold temperatures encountered with well water, it is strongly recommended that the water lines connecting the unit be insulated to prevent water droplets form condensing on the pipe surface.

Refer to piping, Figure 24. Slow closing ***Solenoid Valve (6)*** with a 24 V coil provides on/off control of the water flow to the unit. Refer to the wiring diagram for correct hookup of the valve solenoid coil.

Constant Flow Valve (7) provides correct flow of water to the unit regardless of variations in water pressure. Observe the water flow direction indicated by the arrow on the side of the valve body. Table 8 is a table showing the flow rate of each valve. Two constant flow rate valves may be installed in parallel to increase the flow. For example, when a 8603-007 (6 GPM) and 8603-011 (5 GPM) are installed in parallel the total flow will be 11 GPM.

TABLE 8
CONSTANT FLOW VALVES

Part No.	Min. Available Pressure PSIG	Flow Rate GPM
8603-007	15 ①	6
8603-008	15 ①	8
8603-010	15 ①	4
8603-011	15 ①	5
8603-019	15 ①	3

① The pressure drop through the constant flow valve will vary depending on the available pressure ahead of the valve. Unless minimum of 15 psig is available ***immediately*** ahead of the valve, no water will flow.

COPPER WATER COIL LIMITATIONS

Copper water coils are available as a factory installed option. The unit model number will indicate the coil option as the next to last character; “X” is for standard coil constructed of Cupronickel material and “4” is fro a water coil constructed of copper.

The Cupronickel coil is suitable for all applications. **The copper coil is suitable for applications using ground loop and cooling tower only and is never to be used in an open well application.**

FIGURE 24
PIPING DIAGRAM

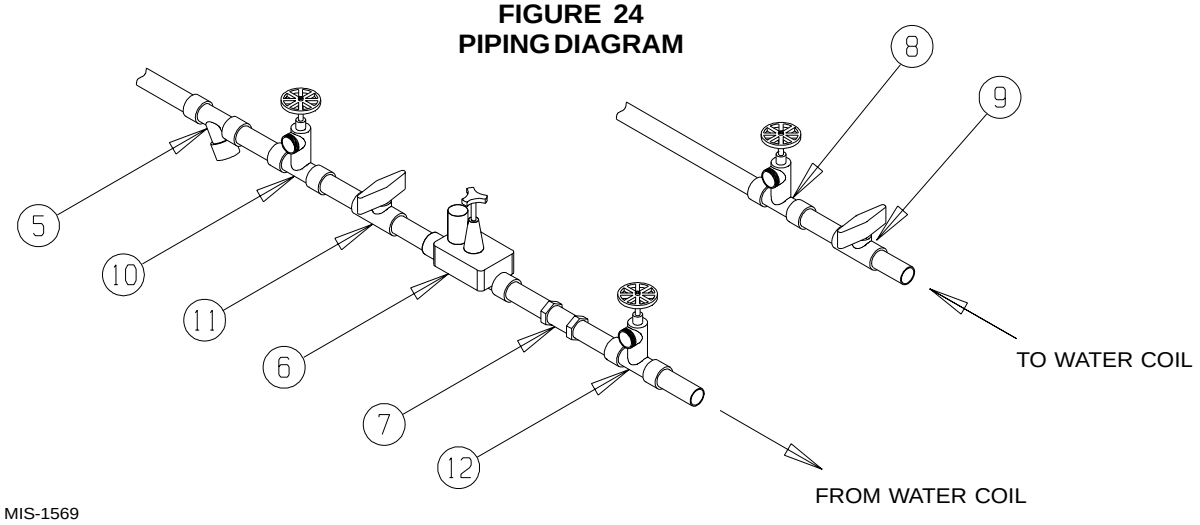

Strainer (5) installed upstream of ***constant flow valve (7)*** to collect foreign material which would clog the flow valve orifice.

Figure 22 on preceding page shows the use of ***shutoff valves (9)*** and ***(11)***, on the in and out water lines to permit isolation of the unit from the plumbing system should future service work require this. Globe valves should not be used as shutoff valves because of the excessive pressure drop inherent in the valve design. Instead us gate or ball valves as shut-offs so as to minimize pressure drop.

Figure 22 shows the use of ***shutoff valves (9)*** and ***(11)***, on the in and out water lines to permit isolation of the unit from the plumbing system should future service work require this. Globe valves should not be used as shutoff valves because of the excessive pressure drop inherent in the valve design. Instead us gate or ball valves as shut-offs so as to minimize pressure drop.

Drain cock (8) and ***(10)***, and tees have been included to permit acid cleaning the refrigerant-to-water coil should such cleaning be required. See WATER CORROSION section on page 34.

Drain cock (12) provides access to the system to check water flow through the constant flow valve to insure adequate water flow through the unit. A water meter is used to check the water flow rate.

WELL PUMP SIZING

Strictly speaking, sizing the well pump is the responsibility of the well drilling contractor. It is important, however, that the HVAC contractor be familiar with the factors that determine what size pump will be required. Rule of thumb estimates will invariably lead to under or oversized well pumps. Undersizing the pump will result in inadequate water to the whole plumbing system but with especially bad results to the heat pump – NO HEAT / NO COOL calls will result. Oversized pumps will short cycle and could cause premature pump motor or switch failures.

The well pump must be capable of supplying enough water and at an adequate pressure to meet competing demands of water fixtures. The well pump must be sized in such a way that three requirements are met:

1. Adequate flow rate in GPM.
2. Adequate pressure at the fixture.
3. Able to meet the above from the depth of the well-feet of lift.

The pressure requirements put on the pump are directly affected by the diameter of pipe being used, as well as, by the water flow rate through the pipe. The work sheet included in manual 2110-078 should guarantee that the well pump has enough capacity. It should also ensure that the piping is not undersized which would create too much pressure due to friction loss. High pressure losses due to undersized pipe will reduce efficiency and require larger pumps and could also create water noise problems.

SYSTEM START UP PROCEDURE FOR OPEN LOOP APPLICATIONS

1. Be sure main power to the unit is OFF at disconnect.
2. Set thermostat system switch to OFF, fan switch to AUTO.
3. Move main power disconnect to ON. Except as required for safety while servicing – ***do not open the unit disconnect switch.***
4. Check system air low for obstructions.
   A. Move thermostat fan switch to ON. Blower runs.
   B. Be sure all registers and grilles are open.
   C. Move thermostat fan switch to AUTO. Blower should stop.
5. Fully open the manual inlet and outlet valves.
6. Check water flow.
   A. Connect a water flow meter to the drain cock between the constant flow valve and the solenoid valve. Run a hose from the flow meter to a drain or sink. Open the drain cock.
   B. Check the water flow rate through constant flow valve to be sure it is the same as the unit is rated for.
   C. When water flow is okay, close drain cock and remove the water flow meter. The unit is now ready to start.
7. Start the unit in cooling mode. By moving the thermostat switch to cool, fan should be set for AUTO.
   A. Check to see the solenoid valve opened.
8. Check the system refrigerant pressures against the cooling refrigerant pressure table in the installation manual for rated water flow and entering water temperatures. If the refrigerant pressures do not match, check for air flow problem that refrigeration system problem.
9. Switch the unit to the heat mode. By moving the thermostat switch to heat, fan should be set for AUTO.
   A. Check to see the solenoid valve opened again.

10. Check the refrigerant system pressures against the heating refrigerant pressure table in installation manual. Once again, if they do not match, check for air flow problems and then refrigeration system problems.

NOTE: If a charge problem is determined (high or low):

A. Check for possible refrigerant loss.

B. Discharge all remaining refrigerant from unit.

C. Evacuate unit down to 29 inches of vacuum.

D. Recharge the unit with refrigerant by weight. This is the only way to insure proper charge.

WATER CORROSION

Two concerns will immediately come to light when considering a water source heat pump, whether for ground water or for a closed loop application: Will there be enough water? And, how will the water quality affect the system?

Water quantity is an important consideration and one which is easily determined. The well driller must perform a pump down test on the well according to methods described by the Nation Well Water Association. This test, if performed correctly, will provide information on the rate of low and on the capacity of the well. It is important to consider the overall capacity of the well when thinking about a water source heat pump because the heat pump may be required to run for extended periods of time.

The second concern, about water quality, is equally important. Generally speaking, if the water is not offensive for drinking purposes, it should pose no problem for the heat pump. The well driller or local water softening company can perform tests which will determine the chemical properties of the well water.

Water quality problems will show up in the heat pump in one of more of the following ways:

1. Decrease in water flow through the unit.
2. Decreased heat transfer of the water coil (entering to leaving water temperature difference is less).

There are four main water quality problems associated with ground water. These are:

1. ***Biological Growth.*** This is the growth of microscopic organisms in the water and will shop up as a slimy deposit throughout the water system. Shock treatment of the well is usually required and this is best left up to the well driller. The treatment consists of injecting chlorine into the well casing and flushing the system until all growth is removed.
2. **Suspended Particles in the Water.** Filtering will usually remove most suspended particles (fine sand, small gravel) from the water. The problem with suspended particles in the water is that it will erode metal parts, pumps, heat transfer coils, etc. So long as the filter is cleaned and periodically maintained, suspended particles should pose no serious problem. Consult with your well driller.
3. **Corrosion of Metal.** Corrosion of metal parts results from either highly corrosive water (acid water, generally not the case with ground water) of galvanic reaction between dissimilar metals in the presence of water. By using plastic plumbing or dielectric unions galvanic reaction is eliminated. The use of corrosion resistant materials such as the Cupro nickel coil) through the water system will reduce corrosion problems significantly.
4. **Scale Formation.** Of all the water problems, the formation of scale by ground water is by far the most common. Usually this scale is due to the formation of calcium carbonate by magnesium carbonate or calcium sulfate may also be present. Carbon dioxide gas (CO_2), the carbonate of calcium and magnesium carbonate, is very soluble in water. It will remain dissolved in the water until some outside factor upsets the balance. This outside influence may be a large change in water temperature or pressure. When this happens, enough carbon dioxide gas combines with dissolved calcium or magnesium in the water and falls out of solution until a new balance is reached. The change in temperature that this heat pump produces is usually not high enough to cause the dissolved gas to fall out of solution. Likewise, if pressure drops are kept to a reasonable level, no precipitation of carbon dioxide should occur.

REMEDIES OF WATER PROBLEMS

Water Treatment. Water treatment can usually be economically justified for close loop systems. However, because of the large amounts of water involved with a ground water heat pump, water treatment is generally too expensive.

Acid Cleaning the Water Coil or Heat Pump Recovery Unit. If scaling of the coil is strongly suspected, the coil can be cleaned up with a solution of Phosphoric Acid (food grade acid). Follow the manufacturer's directions for mixing, use, etc. Refer to the "Cleaning Water Coil", Figure 25 on page 35. The acid solution can be introduced into the heat pump coil through the hose bib A. Be sure the isolation valves are closed to prevent contamination of the rest of the system by the coil. The acid should be pumped from a bucket into the hose bib and returned to the bucket through the other hose bib B. Follow the manufacturer's directions for the product used as to how long the solutionis to be circulated, but it is usually circulated for a period of several hours.

FIGURE 25
CLEANING WATER COIL

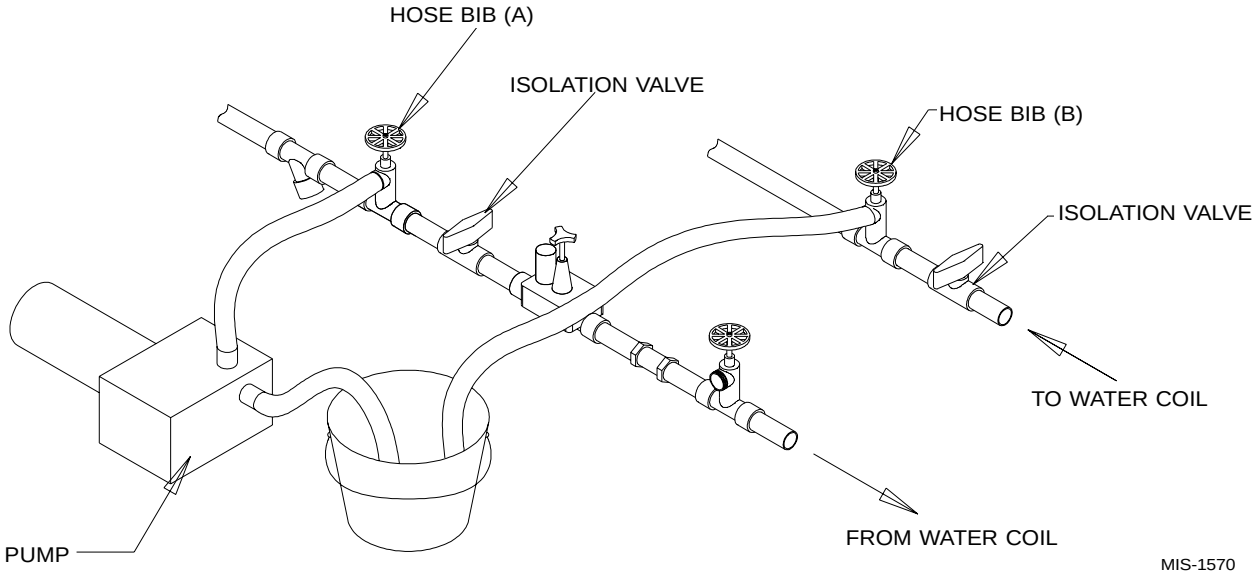

LAKE AND POND INSTALLATIONS

Lakes and ponds can provide a low cost source of water for heating and cooling with a ground water heat pump. Direct usage of the water without some filtration is not recommended as algae and turbid water can foul the water to freon heat exchanger. Instead, there have been very good results using a dry well dug next to the water line or edge. Normal procedure in installing a dry well is to backhoe a 15 to 20 foot hole adjacent to the body of water (set backhoe as close to the water's edge as possible). Once excavated, a perforated plastic casing should be installed with gravel backfill placed around the casing. The gravel bed should provide adequate filtration of the water to allow good performance of the ground water heat pump.

The following is a list of recommendations to follow when installing this type of system (Refer to Figure 26 on page 36):

A. A lake or pond should be at least 1 acre (40,000 a square feet) in surface area for each 50,000 BTUs of ground water heat pump capacity or have 2 times the cubic feet size of the dwelling that you are trying to heat (includes basement if heated).

B. The average water depth should be a least 4 feet and there should be an area where the water depth is at least 12 to 15 feet deep.

C. If possible, use a submersible pump suspended in the dry well casing. Jet pumps and other types of suction pumps normally consume more electrical energy than similarly sized submersible pumps. Pipe the unit the same as a water well system.

D. Size the pump to provide necessary GPM for the ground water heat pump. A 12 GPM or greater water flow rate is required on all modes when used on this type system.

E. A pressure tank should be installed in dwelling to be heated adjacent to the ground water heat pump. A pressure switch should be installed at the tank for pump control.

F. All plumbing should be carefully sized to compensate for friction losses, etc., particularly if the pond or lake is over 200 feet from the dwelling to be heated or cooled.

G. Keep all water lines below low water level and below the frost line.

H. Most installers use 4 inch filed tile (rigid plastic or corrugated) for water return to the lake or pond.

I. The drain line discharge should be located at least 100 feet from the dry well location.

J. The drain line should be installed with a slope of 2 inches per 10 feet of run to provide complete drainage of the line when the ground water heat pump is not operating. This gradient should also help prevent freezing of the discharge where the pipe terminates above the frost line.

K. Locate the discharge high enough above high water level so the water will not back up and freeze inside the drain pipe.

FIGURE 26
WATER WELL SYSTEM

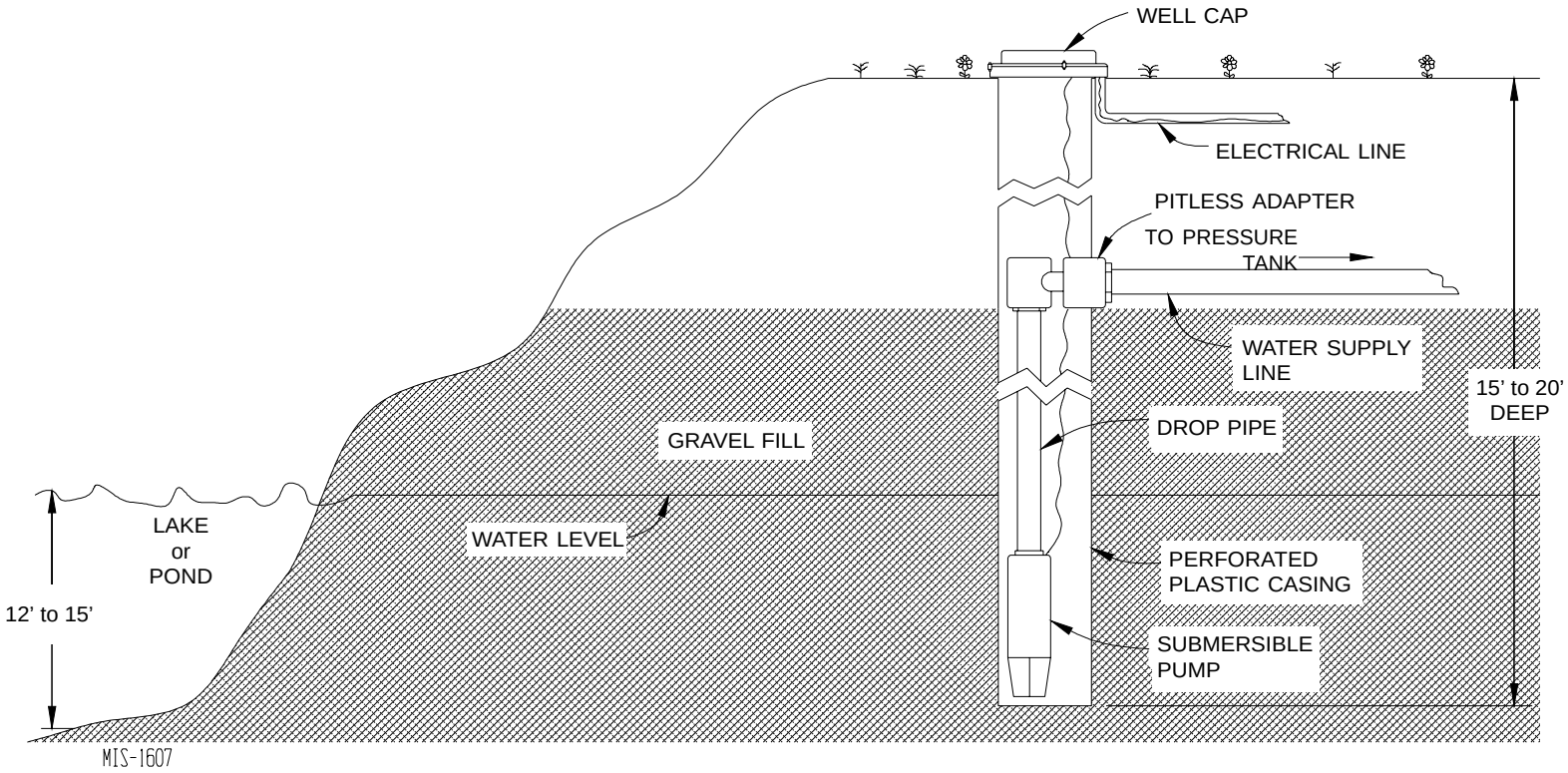

MIS-1607

L. Where the local conditions prevent the use of a gravity drainage system to a lake or pond, you can instead run standard plastic piping out into the pond below the frost and low water level.

⚠ WARNING

Thin ice may result in the vicinity of the discharge line.

For complete information on water well systems and lake and pond applications, refer to Manual 2100-078 available from your distributor.

COOLING TOWER / BOILER APPLICATION

The cooling tower and boiler water loop temperature is usually maintained between 50° F to 100° F to assure adequate cooling and heating performance.

In the cooling mode, heat is rejected from the unit into the source water loop. A cooling tower provides evaporative cooling to the loop water thus maintaining a constant supply temperature to the unit. When utilizing open cooling towers chemical water treatment is mandatory to ensure the water is free from corrosive minerals.

It is imperative that all air be eliminated from the source closed loop side of the heat exchanger to insure against fouling.

In the heating mode, heat is absorbed from the source water loop. A boiler can be utilized to maintain the loop at the desired temperature. In milder climates a "flooded tower" concept is often used. This concept involves adding makeup water to the cooling tower sump to maintain the desired loop temperature.

⚠ CAUTION

Water piping exposed to extreme low ambient temperatures are subject to freezing.

Units are equipped with female pipe thread fittings. Consult the specification sheets for sizes. Teflon tape sealer should be used when connection to the unit to insure against leaks and possible condenser fouling. Do not overtighten the connections. Flexible hoses should be used between the unit and the rigid system to avoid possible vibration. Ball valves should be installed in the supply and return lines for unit isolation and unit water flow rate balancing.

Pressure / temperature ports are recommended in both supply and return lines for system flow balancing. Water flow can be accurately set by measuring the refrigerant to water heat exchangers water side pressure drop. See Table 9 for water flow and pressure drop information.

TABLE 9
WATER FLOW AND PRESSURE DROP

	QW242		QW302		QW361, QW421, QW481		QW601	
GPM	PSIG	Ft. Hd.	PSIG	Ft. Hd.	PSIG	Ft. Hd.	PSIG	Ft. Hd.
3	1.00	2.31	- - -	- - -	- - -	- - -	- - -	- - -
4	1.42	3.28	1.00	2.31	- - -	- - -	- - -	- - -
5	1.83	4.22	1.43	3.30	1.80	4.15	- - -	- - -
6	2.24	5.17	1.86	4.29	3.28	7.57	- - -	- - -
7	2.66	6.14	2.30	5.31	4.77	11.01	- - -	- - -
8	- - -	- - -	2.73	6.30	6.26	14.46	3.30	7.63
9	- - -	- - -	- - -	- - -	7.75	17.90	4.30	9.94
10	- - -	- - -	- - -	- - -	9.24	21.34	5.00	11.55
11	- - -	- - -	- - -	- - -	- - -	- - -	6.00	13.86
12	- - -	- - -	- - -	- - -	- - -	- - -	7.00	16.17
13	- - -	- - -	- - -	- - -	- - -	- - -	8.20	18.95

FIGURE 27
WATER SOURCE HEAT PUMP
COOLING CYCLE

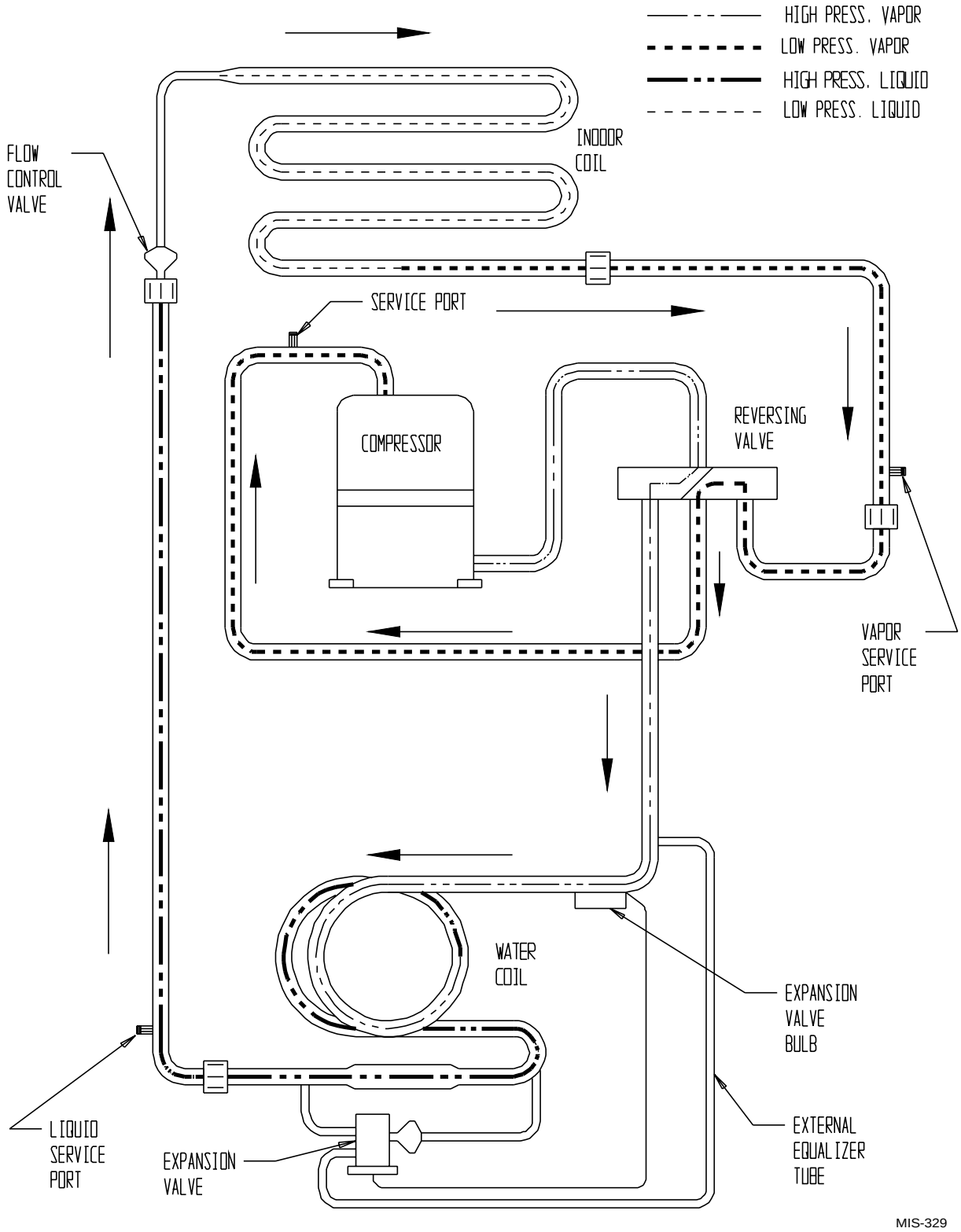

FIGURE 28
WATER SOURCE HEAT PUMP
HEATING CYCLE

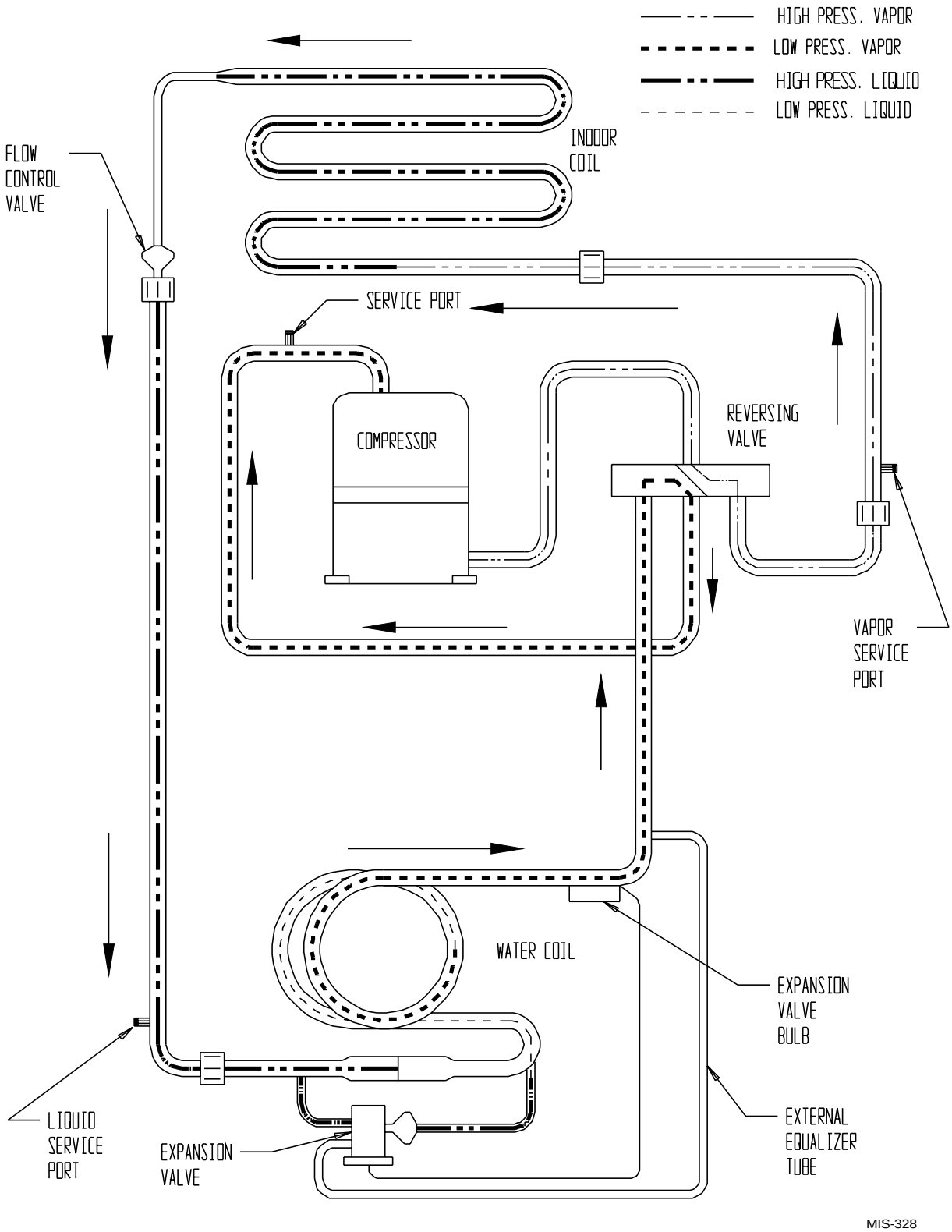

SERVICE HINTS

1. Maintain clean air filters at tall times. Also, do not to needlessly close off supply and return air registers. This reduces air flow through the system, which shortens equipment service life as well as increasing operating costs.
2. Check all power fuses or circuit breakers to be sure that they are the correct rating.

UN-BRAZING SYSTEM COMPONENTS

If the refrigerant charge is removed from a scroll equipped unit by bleeding the high side only, it is sometimes possible for the scrolls to seal, preventing pressure equalization through the compressor. This may leave low side shell and suction line tubing pressurized. If the brazing torch is then applied to the low side while the low side shell and suction line contains pressure, the pressurized refrigerant and oil mixture could ignite when it escapes and contacts the brazing flame. To prevent this occurrence, it is important to check both the high and low side with manifold gauges before un-brazing.

⚠ WARNING

Both the high and low side of the scroll compressor must be checked with manifold gauges before un-brazing system components. Failure to do so could cause pressurized refrigerant and oil mixture to ignite if it escapes and contacts the brazing flame causing property damage, bodily harm or death.

TROUBLESHOOTING ECM BLOWER MOTORS

⚠ CAUTION

Disconnect power from unit before removing or replacing connectors, or servicing motor. Wait at least 5 minutes after disconnection power before opening motor.

SYMPTOM	*CAUSE / PROCEDURE*
Motor rocks slightly when starting.	• This is normal start-up for ICM
Motor won't start	
• No movement	• Check power at motor • Check low voltage (24 VAC R to C) at motor • Check low voltage connections (G, Y, W, R, C) at motor • Check for unseated pins in connectors on motor harness • Test with a temporary jumper between R - G • Check motor for tight shaft • Run **Mositure Check**
• Motor rocks, but won't start	• Check for loose or compliant motor mount • Make sure blower wheel is tight on shaft
Motor oscillates up and down while being tested off of blower	• It is normal for motor to oscillate with no load on shaft.
• Noisy blower of cabinet	• Check for loose blower housing, panels, etc. • High static creating high blower speed? – Check for air whistling through seams in ducts, cabinets or panels. – Check for cabinet / duct deformation
• "Hunts" or "puffs" at high CFM (speed)	• Does removing panel or filter reduce "puffing"? – Reduce restiction – Reduce maximum airflow
Evidence of Moisture	
• Motor failure of malfunction has occured and moisture is present	• Replace motor and perform **Moisture Check**
• Evidence of moisture present inside air mover	• Perform Moisture Check

DO	*DON'T*
• Check out motor, controls, wiring and connections thoroughly before replacing motor	• Automatically assume the motor is bad
• Orient connectors down so water can't get in; install "drip loops"	• Locate connectors above 7 and 4 o'closk postions
• Use authorized motor and control model numbers for replacement	• Replace one motor of control model number with another (unless an authorized replacement)
• Keep static pressure to a minimum: – Recommend high efficiency, low static filters – Recommend keeping filters clean – Design duct work for minimum static, maximum comfort – Look for and recommend duct work improvement,where necessary, in replacement.	• Use high pressure drop filters. Some have 1/2" H_2O drop! • Use restricted returns

SYMPTOM	*CAUSE / PROCEDURE*
Motor starts but runs erratically	
• Varies up and down or intermittent	• Check line voltage for variation or "sag" • Check low voltage connections (G, Y, W, R, C) at motor; unseated pins in motor harness connectors • Check "Bk" for erratic CFM command (in variable speed applications • Check out system controls - thermostat? • Perform **Moisture Check**
• "Hunts" or puffs" at high CRM (speed)	• Does removing panel or filter reduce "puffing"? – Reduce restriction – Reduce maximum airflow
• Stays at low CFM despite sysstem call for cool or heat CFM	• Check low voltage (thermostat) wires and connections • Verify fan is not in dalay mode - wait until delay is complete • "R" missing / not connected at motor Perform motor / control replacement check
• Stays at high CFM	• "R" missing / not connected at motor • Is fan in dalay mode? - wait until delay time complete
• Blower won't shut off	• Current leakage from controls into G, Y or W? – Check for Triac switched thermostat or solid state relay

SYMPTON	*CAUSE / PROCEDURE*
Excessive noise	• Determine if it is air noise, cabinet, duct or motor noise . Interview customer if necessry.
• Air Noise	• High static creating high blower speed? – Is airflow set properly? – Does removing filter cause blower to slow down? Check / replace filter – Use low pressure drop filter – Check / correct duct restirctions

DO	*DON'T*
• Size the equpment wisely	• Oversize system then compensate with low airflow
• Check orientation before inserting motor connectors	• Plug in power connector backwards • Force plugs

MOISTURE CHECK PROCEDURE	*COMFORT CHECK PROCEDURE*
• Connectors are oriented "down"	• Check proper airflow settings
• Arrange harnesses with "drip loop" under motor	• Low static pressure for lowest noise
• Condenste drain plugged?	• Set low continuous fan CFM
• Check for low airflow (too much latent capacity)	• Use humidistat and 2-speed cooling units
• Check for undercharged condition	• Use zoning controls designed for ICM that regulate CFM
• Check and plug leaks in reutrn ducts and cabinet	• Thermostat in bad location?

QUICK REFERENCE TROUBLESHOOTING CHART FOR WATER TO AIR HEAT PUMP

● DENOTES COMMON CAUSE
✕ DENOTES OCCASIONAL CAUSE

		POWER SUPPLY																		WATER COIL SECTION																												INDOOR SECTION						AUX.	
		Line Voltage										Control Circuit								Compressor				Refrigerant System								Water Solenoid			Rev. Valve		Water Coil							Indoor Blower Motor and Coil						Heat	Gen.
		Power Failure	Blown Fuse or Tripped Breaker	Faulty Wiring	Loose Terminals	Low Voltage	Defective Contacts in Contactor	Compressor Overload	Potential Relay	Run Capacitor	Start Capacitor	Faulty Wiring	Loose Terminals	Control Transformer	Low Voltage	Thermostat	Contactor Coil	Pressure Controls (High or Low)	Indoor Blower Relay	Discharge Line Hitting Inside of Shell	Bearings Defective	Seized	Valve Defective	Motor Wingings Defective	Refrigerant Charge Low	Refrigerant Overcharge	High Head Pressure	Low Head Pressure	High Suction Pressure	Low Suction Pressure	Non-Condensables	Unequalized Pressures	Solenoid Valve Stuck Closed (Htg)	Solenoid Valve Stuck Closed (Clg)	Solenoid Valve Stuck Open (Htg or Clg)	Leaking	Defective Valve or Coil	Plugged or Restricted Metering Device (Htg)	Scaled or Plugged Coil (Htg)	Scaled or Plugged Coil (CLg)	Water Volume Low (Htg)	Water Volume Low (Clg)	Low Water Temperature (Htg)	Plugged or Restricted Metering Device (Clg)	Fins Dirty or Plugged	Motor Winding Defective	Air Volume Low	Air Filters Dirty	Undersized or Restricted Ductwork	Auxillary Heat Upstream of Coil	
Heating or Cooling Cycles	Compressor Will Not Run No Power at Contactor	●	●	●	●		+	+				●	●	●	+	+	●	●																																			
	Compressor Will Not Run Power at Contactor			●	●	●		●	●	●	●										+	●		●							●																						
	Compressor "Hums" But Will Not Start			●	●	●	+		●	●	●										●	●		●							●																						
	Compressor Cycles on Overload			●	●	●	+	●	●	●	●										+		+	+	●	●	+		+		●					+			+	+	+	+			+	+	+	●	+			
	Thermostat Check Light Lite-Lockout Relay																	●																																			
	Compressor Off on High Pressure Control																	+	●							●					●			●				+		+		●		+	●	●	●	●	●	●		
	Compressor Off on Low Pressure Control																		+						●			●		●			●						+		●		+	●								
	Compressor Noisy																			+	+	●																															
	Head Pressure Too High																									●					●			●			+	+		●		●		+	+	+	●	●	+	●	
	Head Pressure Too Low																						●		●					●			+			+			●		●		●									
	Suction Pressure Too High																						●			●	●									+																
	Suction Pressure Too Low																								●			+					●					+	●		●		+	+	●	+	●	●	+		
	I.D. Blower Will Not Start	●	●	●	●							●	●	●	+	+			●																																		
	I.D. Coil Frosting or Icing																								●					●														+	●	●	●	●	+		
	High Compressor Amps					●				●											●	●		+		●	●		●		●							+		●		●		+	●	●	●	●	+	+	
	Excessive Water Usage																																		●				+	+											
Cooling Cycle	Compressor Runs Continuously – No Cooling																						●		●					●										+		+		+	●	●	●	●	+		
	Liquid Refrigerant Flooding Back To Compressor																									●	●																		●	●	●	●	+		
Heating Cycle	Compressor Runs Continuously – No Heating																						●		●					●			●			+		+	●		●		+									
	Reversing Valve Does Not Shift			●	●																				+			+									●															
	Liquid Refrigerant Flooding Back To Compressor																									●	●						●			+	+		●		●		●									
	Aux. Heat on I.D. Blower Off			●	●							●	●			+			●																												●					
	Excessive Operation Costs			+	+											+									●	●							+	+		●	●		+	+	+				+	+	+				
	Ice in Water Coil			+	+																				●								●				●		+		●											

GROUND SOURCE HEAT PUMP
PERFORMANCE REPORT

This performance check report should be filled out by installer and retained with unit.

DATE: _____ TAKEN BY: _____

1. UNIT:
   Mfgr _____ Model # _____ S/N _____

   THERMOSTAT:
   Mfgr _____ Model # _____ P/N _____
2. Person Reporting _____
3. Company Reporting _____
4. Installed By _____ Date Installed _____
5. User's (Owner's) Name _____

   Address _____

   _____
6. Unit Location _____

WATER SYSTEM INFORMATION

7. Open Loop System (Water Well) _____ Closed Loop System _____
   A. If Open Loop where is water discharged? _____
8. The following questions are for ***Closed Loop systems only***
   A. Closed loop system designed by _____
   B. Type of antifreeze used: _____% Solution _____
   C. System type: Series _____ Parallel _____
   D. Pipe Material _____ Nominal Size _____
   E. Pipe Installed:
      1. Horizontal _____ Total length of pipe _____ ft

         No. pipes in trench _____ Depth bottom pipe _____ ft
      2. Vertical _____ Total length of bore hole _____ ft

THE FOLLOWING INFORMATION IS NEEDED TO CHECK PERFORMANCE OF UNIT

FLUID SIDE DATA	Cooling	** Heating	
9. Entering fluid temperature	_____	_____	F
10. Leaving fluid temperature	_____	_____	F
11. Entering fluid pressure	_____	_____	PSIG
12. Leaving fluid pressure	_____	_____	PSIG
13. Pressure drop through coil	_____	_____	PSIG
14. Gallons per minute through the water coil	_____	_____	GPM
15. Liquid or discharge line pressure	_____	_____	PSIG
16. Suction line pressure	_____	_____	PSIG
17. Voltage at compressor (unit running)	_____	_____	V
18. Amperage draw at line side of contactor	_____	_____	A
19. Amperage at compressor common terminal	_____	_____	A
20. * Suction line temperature 6” from compressor	_____	_____	F
21. * Superheat at compressor	_____	_____	F
22. * Liquid line temperature at metering device	_____	_____	F
23. * Coil subcooling	_____	_____	F

INDOOR SIDE DATA	Cooling	** Heating	
24. Dry bulb temperature at air entering indoor coil	_____	_____	F
25. Wet bulb temperature of air entering indoor coil	_____	_____	F
26. Dry bulb temperature of air leaving indoor coil	_____	_____	F
27. Wet bulb temperature of air leaving indoor coil	_____	_____	F
28. * Supply air static pressure (packaged unit)	_____	_____	WC
29. * Return air static pressure (packaged unit)	_____	_____	WC

30. Other information about installation

_____
_____
_____
_____
_____
_____
_____
_____

** When performing a heating test insure that second stage heat is not activated.
* Items that are optional

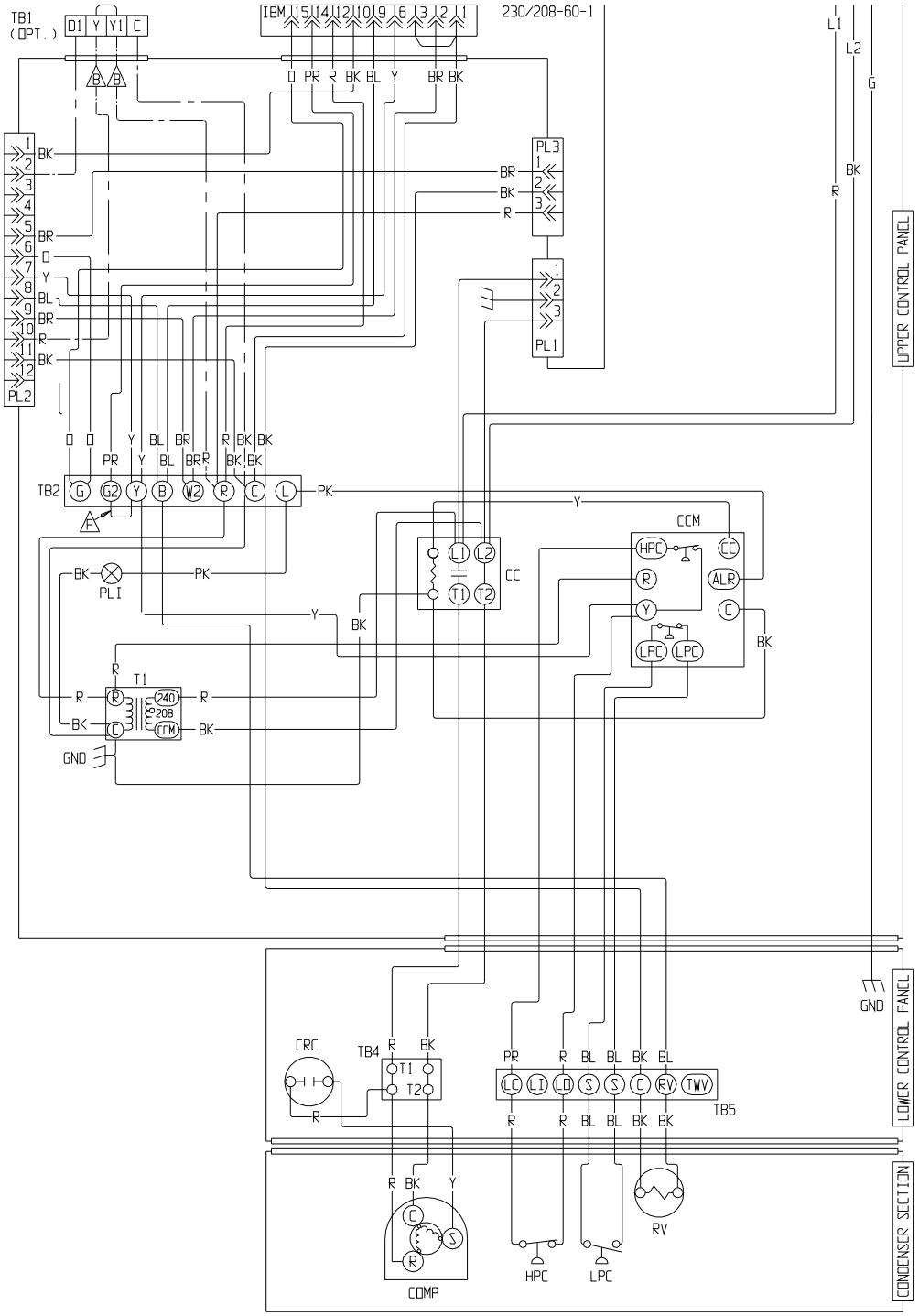

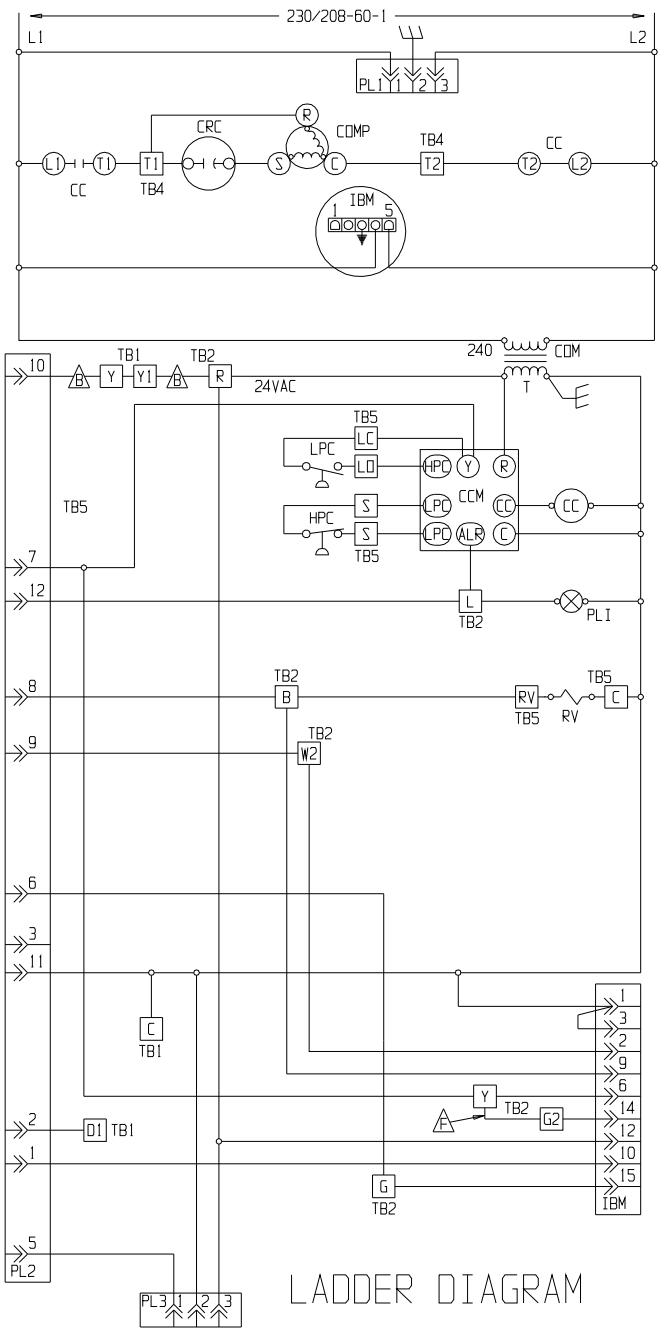

LADDER DIAGRAM

4100-108 C

COMPONENT CODE	
CB1	CIRCUIT BREAKER #1
CB2	CIRCUIT BREAKER #2
CC	COMPRESSOR CONTACTOR
CCM	COMPRESSOR CONTROL MODULE
COMP	COMPRESSOR
CRC	COMPRESSOR RUN CAPACITOR
DFC	DEFROST CONTROL
DFS	DEFROST SENSOR
FB	FUSE BLOCK
GND	GROUND
HC1	HEATER CONTACTOR #1
HC2	HEATER CONTACTOR #2
HPC	HIGH PRESSURE CONTROL
HS1	HEAT STRIP #1
HS2	HEAT STRIP #2
IBM	INDOOR BLOWER MOTOR
LAB	LOW AMBIENT BYPASS
LAC	LOW AMBIENT CONTROL
LPB	LOW PRESSURE BYPASS
LPC	LOW PRESSURE CONTROL
LS	LIMIT SWITCH
OFM	OUTDOOR FAN MOTOR
OMR	OUTDOOR MOTOR RELAY
P1	ACCESSORY PLUG #1
P2	ACCESSORY PLUG #2
P3	ACCESSORY PLUG #3
PLI	PRESSURE LOCKOUT INDICATOR
PM	PHASE MONITOR
RV	REV. VALVE SOLINOID
SR	STAGING RELAY
T1	TRANSFORMER #1
T2	TRANSFORMER #2
TB1	TERMINAL BLOCK #1
TB2	TERMINAL BLOCK #2
TB3	TERMINAL BLOCK #3
TB4	TERMINAL BLOCK #4
TB5	TERMINAL BLOCK #5
TB6	TERMINAL BLOCK #6
TB7	TERMINAL BLOCK #7
TWV	THREE WAY VALVE

A B C D LABELED WIRES CONNECT IF NO OPTIONS USED.

E MOVE RED WIRE TO 208V TAP FOR 208V OPERATION

F INSTALL JUMPER FOR HIGH SPEED BLOWER OPER. ON MODELS 36 & 42

H REMOVE JUMPER WHEN LAC IS INSTALLED

WIRING CODE				
	FACTORY STD.		FIELD	OPTIONAL
HIGH VOLTAGE				
LOW VOLTAGE				
ACCESSORY				

COLOR CODE			
BK	BLACK	PK	PINK
BL	BLUE	PR	PURPLE
BR	BROWN	R	RED
G	GREEN	T	TAN
GY	GRAY	Y	YELLOW
O	ORANGE		

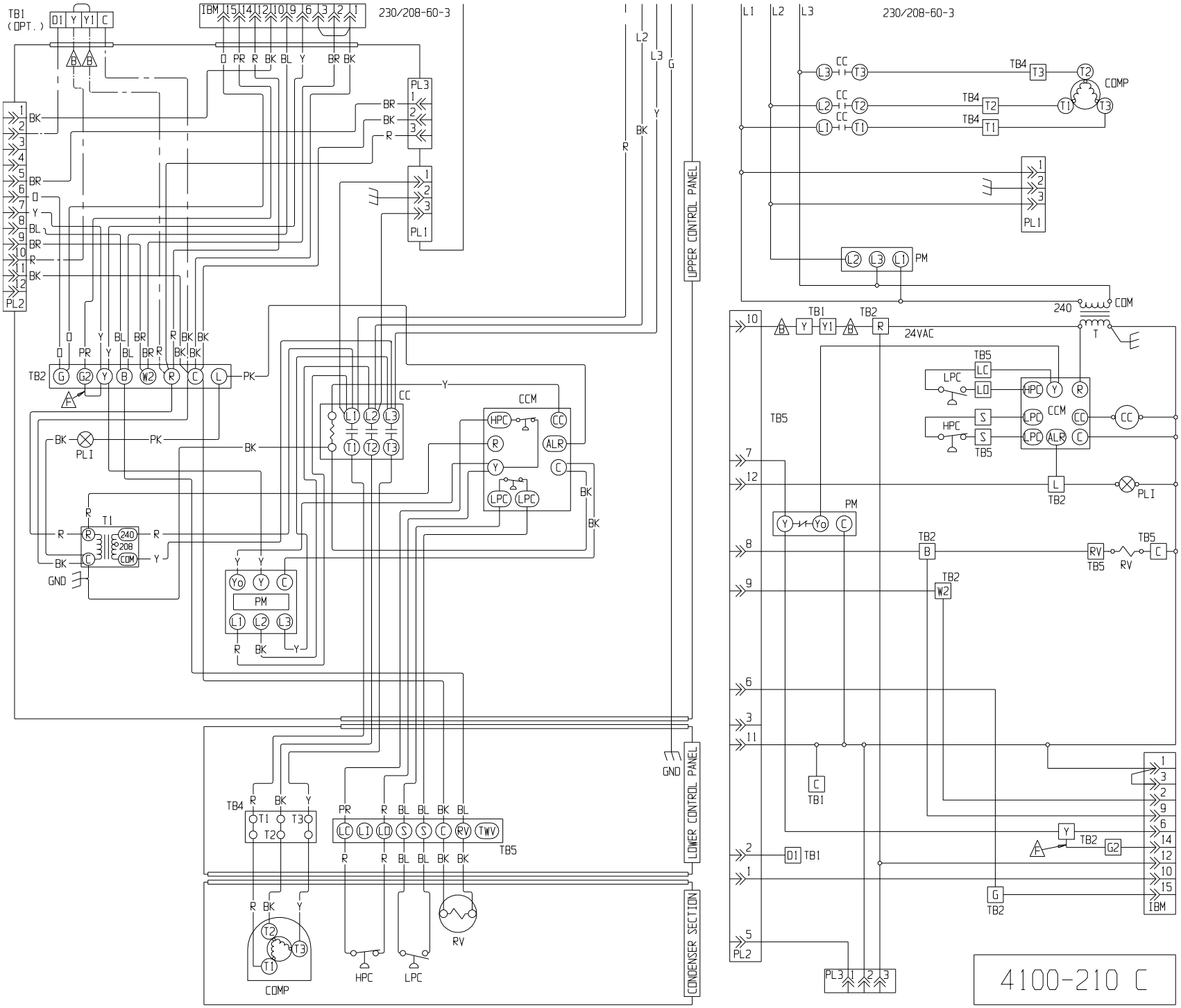

COMPONENT CODE	
CB1	CIRCUIT BREAKER #1
CB2	CIRCUIT BREAKER #2
CC	COMPRESSOR CONTACTOR
CCM	COMPRESSOR CONTROL MODULE
COMP	COMPRESSOR
DCC	DUAL CAN CAPACITOR
DFC	DEFROST CONTROL
DFS	DEFROST SENSOR
FB	FUSE BLOCK
GND	GROUND
HC1	HEATER CONTACTOR #1
HC2	HEATER CONTACTOR #2
HPC	HIGH PRESSURE CONTROL
HS1	HEAT STRIP #1
HS2	HEAT STRIP #2
IBM	INDOOR BLOWER MOTOR
LAB	LOW AMBIENT BYPASS
LAC	LOW AMBIENT CONTROL
LPB	LOW PRESSURE BYPASS
LPC	LOW PRESSURE CONTROL
LS	LIMIT SWITCH
OFM	OUTDOOR FAN MOTOR
OMR	OUTDOOR MOTOR RELAY
P1	ACCESSORY PLUG #1
P2	ACCESSORY PLUG #2
P3	ACCESSORY PLUG #3
PLI	PRESSURE LOCKOUT INDICATOR
PM	PHASE MONITOR
RV	REV. VALVE SOLINOID
SR	STAGING RELAY
T1	TRANSFORMER #1
T2	TRANSFORMER #2
TB1	TERMINAL BLOCK #1
TB2	TERMINAL BLOCK #2
TB3	TERMINAL BLOCK #3
TB4	TERMINAL BLOCK #4
TB5	TERMINAL BLOCK #5
TB6	TERMINAL BLOCK #6
TB7	TERMINAL BLOCK #7
TWV	THREE WAY VALVE

A B C D LABELED WIRES CONNECT IF NO OPTIONS USED.

E MOVE RED WIRE TO 208V TAP FOR 208V OPERATION

F INSTALL JUMPER FOR HIGH SPEED BLOWER OPER. ON MODELS 36 & 42

H REMOVE JUMPER WHEN LAC IS INSTALLED

WIRING CODE				
	FACTORY STD.		FIELD	OPTIONAL
HIGH VOLTAGE				
LOW VOLTAGE				
ACCESSORY				

COLOR CODE			
BK	BLACK	PK	PINK
BL	BLUE	PR	PURPLE
BR	BROWN	R	RED
G	GREEN	T	TAN
GY	GRAY	Y	YELLOW
O	ORANGE		

4100-210 C

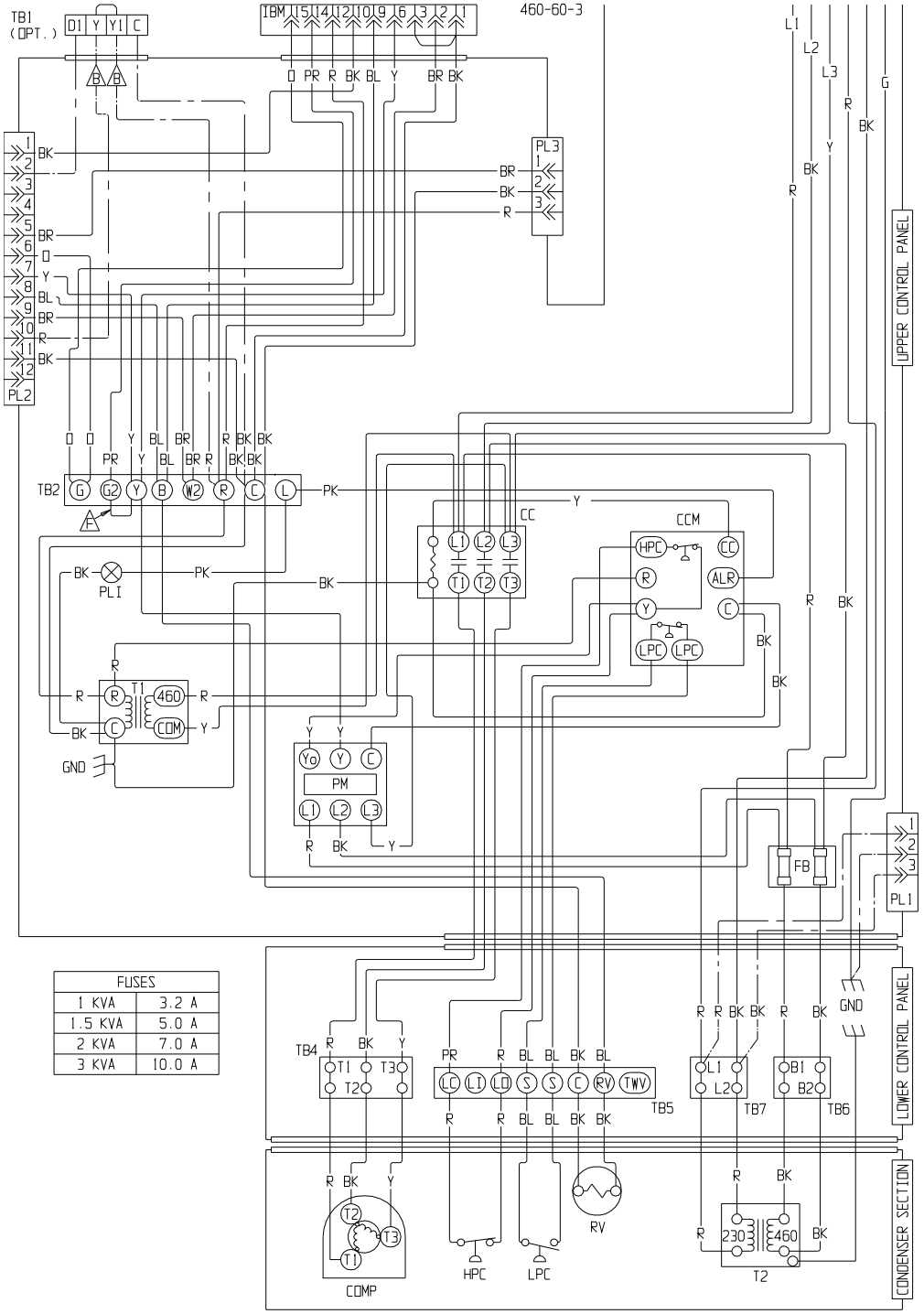

FUSES	
1 KVA	3.2 A
1.5 KVA	5.0 A
2 KVA	7.0 A
3 KVA	10.0 A

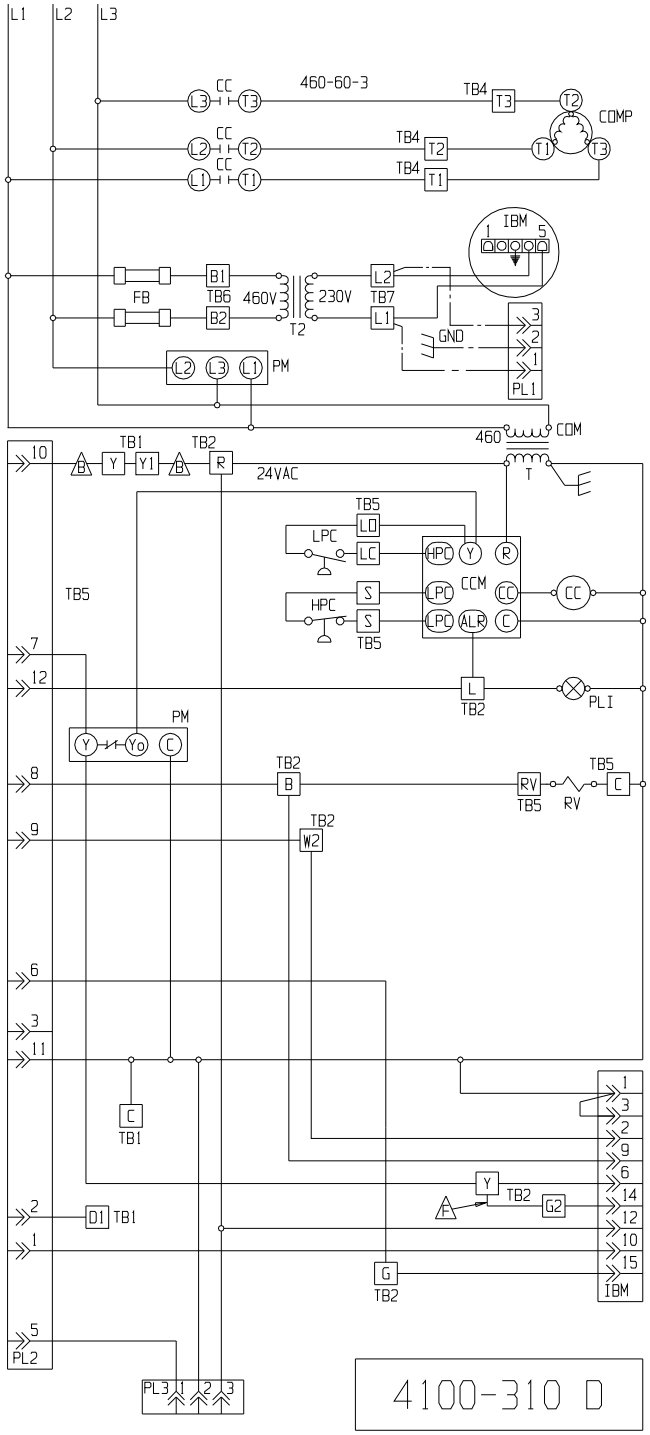

COMPONENT CODE	
CB1	CIRCUIT BREAKER #1
CB2	CIRCUIT BREAKER #2
CC	COMPRESSOR CONTACTOR
CCM	COMPRESSOR CONTROL MODULE
COMP	COMPRESSOR
DCC	DUAL CAN CAPACITOR
DFC	DEFROST CONTROL
DFS	DEFROST SENSOR
FB	FUSE BLOCK
GND	GROUND
HC1	HEATER CONTACTOR #1
HC2	HEATER CONTACTOR #2
HPC	HIGH PRESSURE CONTROL
HS1	HEAT STRIP #1
HS2	HEAT STRIP #2
IBM	INDOOR BLOWER MOTOR
LAB	LOW AMBIENT BYPASS
LAC	LOW AMBIENT CONTROL
LPB	LOW PRESSURE BYPASS
LPC	LOW PRESSURE CONTROL
LS	LIMIT SWITCH
OFM	OUTDOOR FAN MOTOR
OMR	OUTDOOR MOTOR RELAY
P1	ACCESSORY PLUG #1
P2	ACCESSORY PLUG #2
P3	ACCESSORY PLUG #3
PLI	PRESSURE LOCKOUT INDICATOR
PM	PHASE MONITOR
RV	REV. VALVE SOLINOID
SR	STAGING RELAY
T1	TRANSFORMER #1
T2	TRANSFORMER #2
TB1	TERMINAL BLOCK #1
TB2	TERMINAL BLOCK #2
TB3	TERMINAL BLOCK #3
TB4	TERMINAL BLOCK #4
TB5	TERMINAL BLOCK #5
TB6	TERMINAL BLOCK #6
TB7	TERMINAL BLOCK #7
TWV	THREE WAY VALVE

A B C D LABELED WIRES CONNECT IF NO OPTIONS USED.

E MOVE RED WIRE TO 208V TAP FOR 208V OPERATION

F INSTALL JUMPER FOR HIGH SPEED BLOWER OPER. ON MODELS 36 & 42

H REMOVE JUMPER WHEN LAC IS INSTALLED

WIRING CODE	FACTORY STD.		FIELD	OPTIONAL	
HIGH VOLTAGE					
LOW VOLTAGE					
ACCESSORY					

COLOR CODE			
BK	BLACK	PK	PINK
BL	BLUE	PR	PURPLE
BR	BROWN	R	RED
G	GREEN	T	TAN
GY	GRAY	Y	YELLOW
O	ORANGE		

4100-310 D