INSTALLATION INSTRUCTIONS

COMMERCIAL ROOM VENTILATORS WITH EXHAUST

MODELS
CRVS-3
CRVP-3

For Use with Bard 1-1/2 through 3 Ton Wall Mount Air Conditioners and Heat Pumps

Bard Manufacturing Company, Inc.
Bryan, Ohio 43506

Since 1914...Moving ahead just as planned.

CLIMATE CONTROL SOLUTIONS

Manual : 2100-448B
Supersedes: 2100-448A
File: Volume III Tab 19
Date: 05-25-06

© Copyright 2004

CONTENTS

General
General Information 3
Unpacking 3
Description 3

Installation
Basic Installation 4
Blade Adjustment for Desired Ventilation Air ... 10
Commercial Room Ventilator –
WA, WH & WL Series 13

Figures
Figure 1 Removal of Exterior Panels 4
Figure 2 Removal of Exhaust Cover Plate 5
Figure 3 Re-Routing Wires Left Hand Units 6
Figure 4 Inserting Ventilator Into Unit 7
Figure 5 Top View of Control Panel 8
Figure 5A 9
Figure 5B 9
Figure 6 CRVS Wiring Diagram 10
Figure 7 Call for Blower Operation 13
Figure 8 Call for Cooling Operation 14

Tables
Table 1 4

Graphs
SH261 & SH311 High Speed 11
SH261 & SH311 Low Speed 11
WA/WH30, WA37 & WH36 High Speed 12
WA/WH30, WA37 & WH36 Low Speed 12

Manufactured under U.S. Patent number 5,301,744.

COPYRIGHT DECEMBER 2004
BARD MANUFACTURING COMPANY
BRYAN, OHIO USA 43506

GENERAL INFORMATION

The ventilator should only be installed by a trained heating and air conditioning technician. These instructions serve as a guide to the technician installing the ventilator package. They are not intended as a step by step procedure with which the mechanically inclined owner can install the package.

The ventilator housing is shipped in one carton which contains the electrical harness, miscellaneous hardware and installation instructions.

UNPACKING

Upon receipt of the equipment be sure to compare the model number found on the shipping label with the accessory identification information on the ordering and shipping document to verify that the correct accessory has been shipped.

Inspect the carton housing of each ventilator as it is received, and before signing the freight bill, verify that all items have been received and that there is no visible damage. Note any shortages or damage on all copies of the freight bill. The receiving party must contact the last carrier immediately, preferably in writing, requesting inspection by the carrier's agent. Concealed damage not discovered until after loading must be reported to the carrier within 15 days of its receipt.

DESCRIPTION

The CRVS-3 and CRVP-3 ventilators are designed to be used with Bard 1½ through 3 ton wall mount series heat pumps and air conditioners. They are electromechanical vent systems designed to provide fresh air to meet indoor air quality standards.

MODELS:

When installed in the above listed models, the CRV provides built in exhaust provisions. When the damper blade opens to bring fresh air in, the damper also opens an exhaust relief. The exhaust air will flow into the condenser section of the unit. The condenser fan will help draw exhaust air out.

INSTALLATION

BASIC INSTALLATION

1. Unpack the ventilator assembly which includes the integral ventilator with attached electrical harness and miscellaneous hardware.

⚠ WARNING

Open and lock unit disconnect switch before installing this accessory to prevent injury or death due to electrical shock or contact with moving parts. Turn thermostat to off.

TABLE 1

MODEL	FOR USE WITH FOLLOWING UNITS		
CRVS-3 CRVP-3	WA30 WA36 WA37	WH30 WH36 SH26 SH31	WL30 WL36 WL37

2. Remove and save the existing exterior blower access and service access panels on the Bard wall mount unit. (See Figure 1.)

FIGURE 1
REMOVAL OF EXTERIOR PANELS

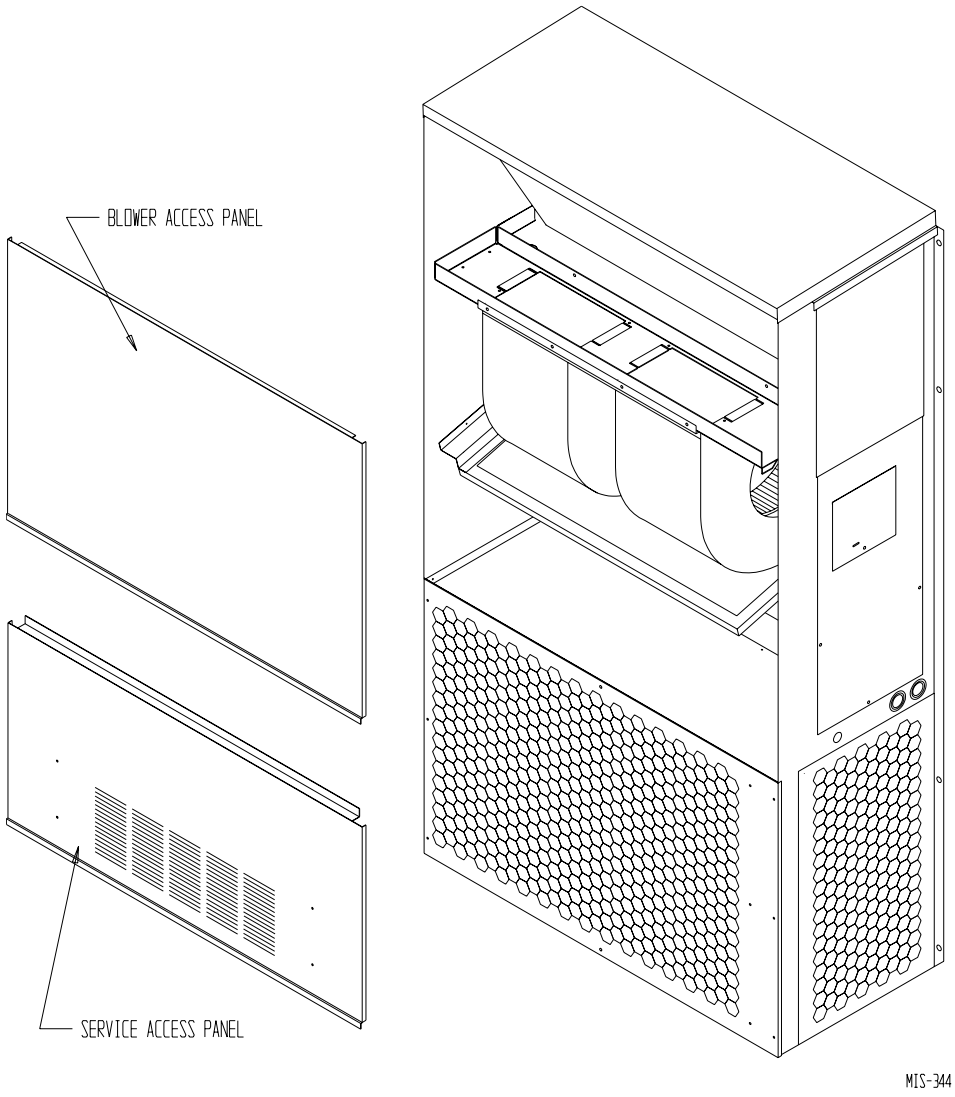

3. Remove and save existing unit return air filter and left side filter support bracket by removing two (2) screws from front side of unit. Remove and save top four (4) screws from grille. (See Figure 2.)

4. Remove and discard the exhaust cover plate.

FIGURE 2
REMOVAL OF EXHAUST COVER PLATE

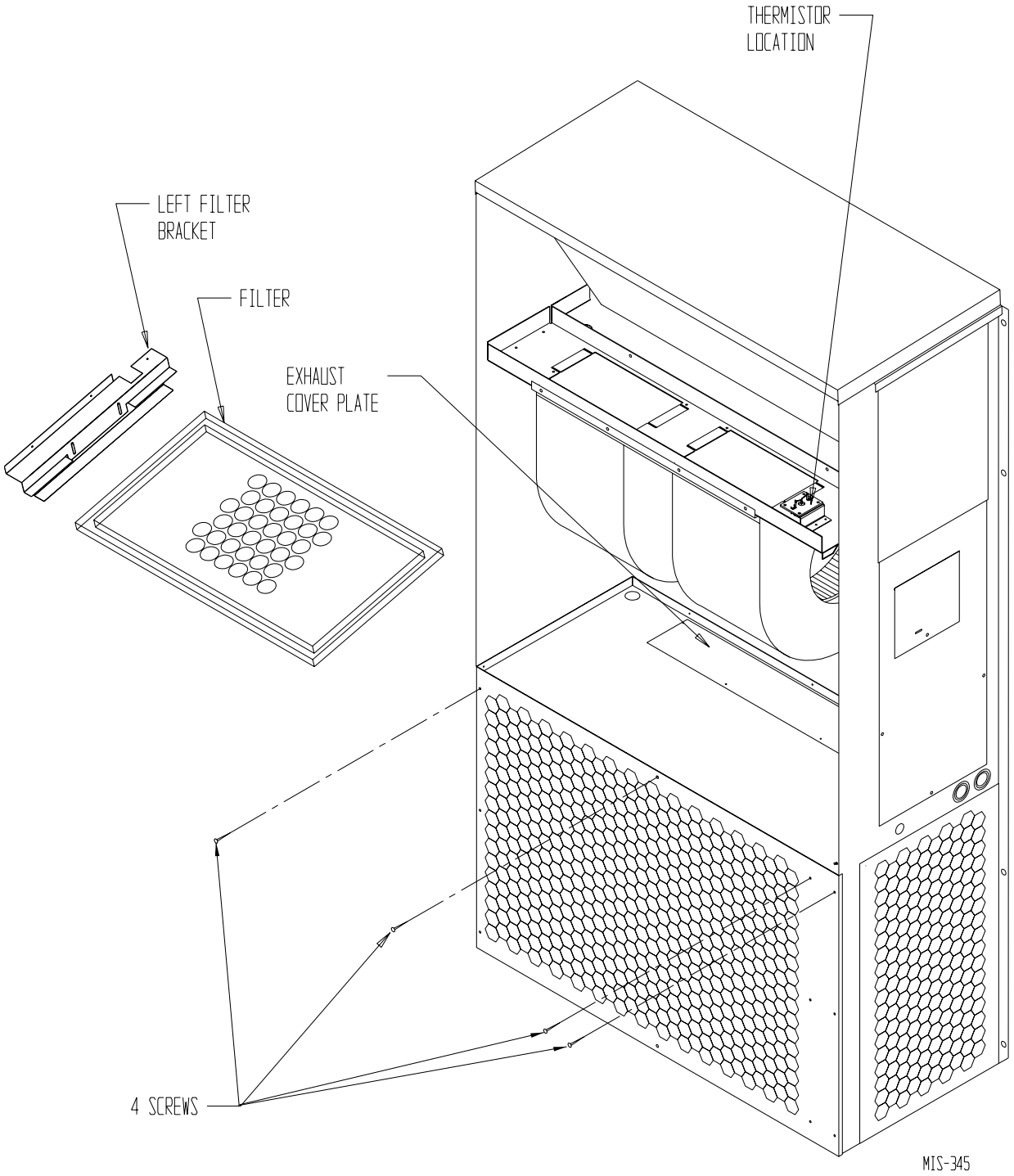

5. For Installation of Left Hand Units Only – Remove strain relief in right side of CRV. Unclip the right side wire tie holding the wire harness. Reroute wires to left side of CRV. Reinstall wire tie in left side hole. Route wires through left side and reinstall strain relief. (See Figure 3.)

6. Install ventilator by inserting the ventilator into the unit to the far left side clearing the right filter bracket. Once the ventilator is fully inserted, slide the ventilator to the right until it is tight against the back of the control panel. (See Figure 4.)

FIGURE 3
REROUTING WIRES FOR LEFT HAND UNIT INSTALLATION

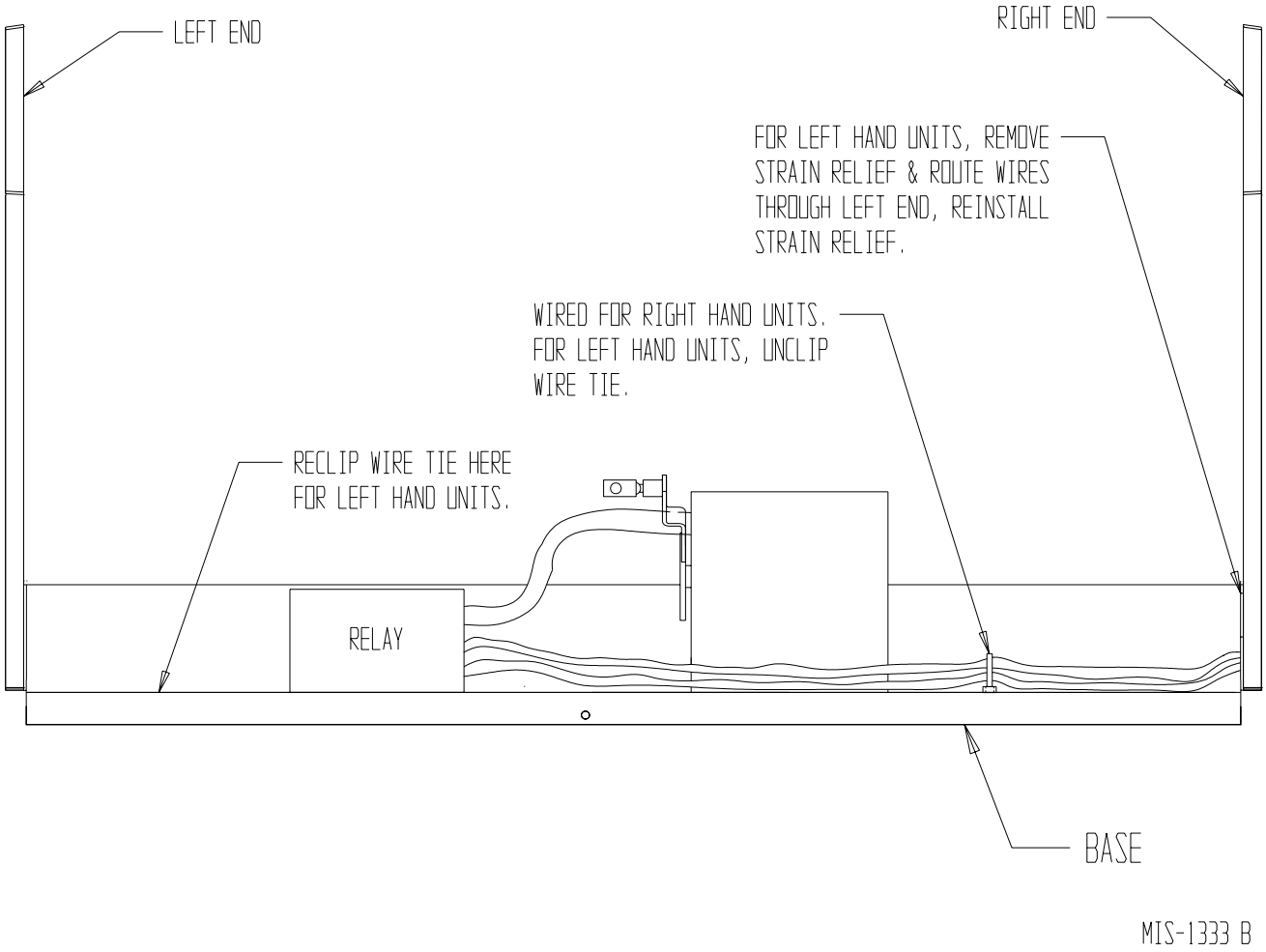

IMPORTANT: Position front lip of ventilator under front grille and on top of condenser partition. (See Figure 4 inset.) This is important to ensure proper drainage of any water entering damper assembly.

7. Open control panel to gain access to unit low voltage terminal block.
8. Route electrical harness leads through the 7/8" bushing in control panel (Figure 4) into low voltage box.

FIGURE 4
INSERTING VENTILATOR INTO THE UNIT

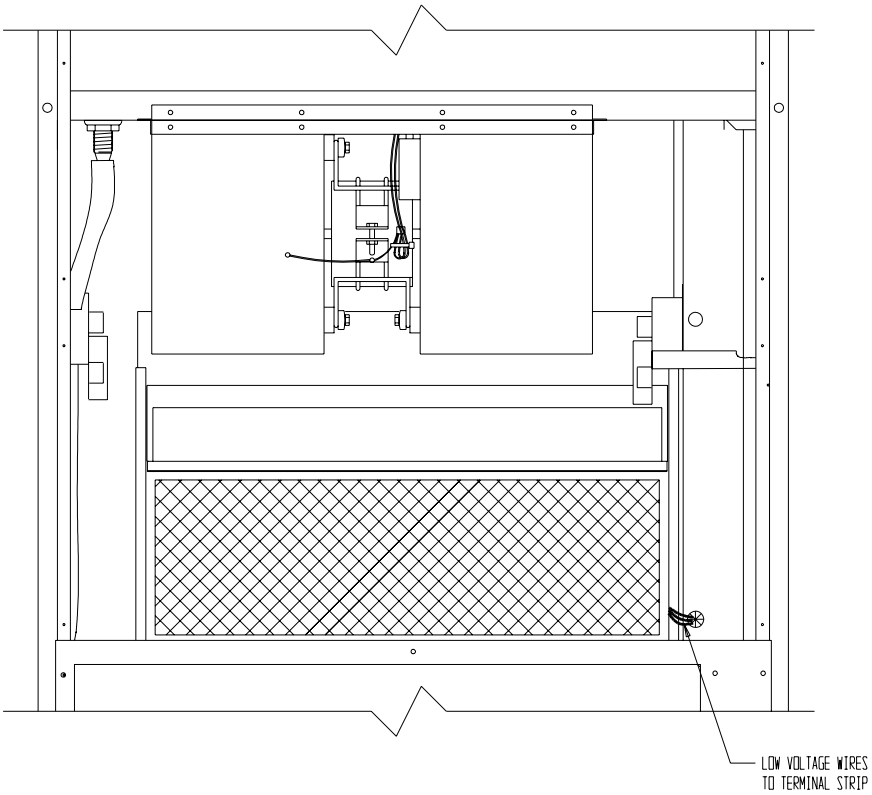

FIGURE 4 INSET
SIDE SECTION

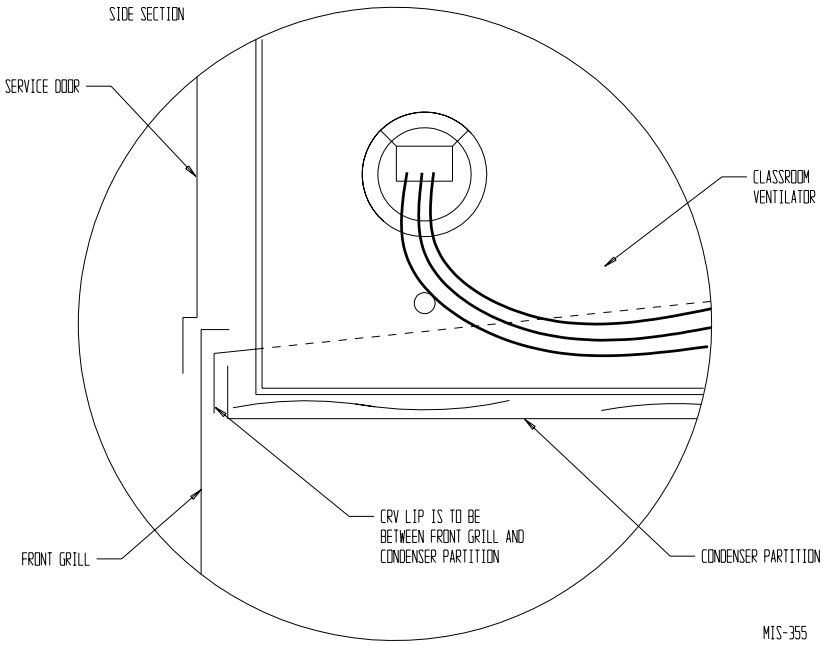

FIGURE 5

CRVS-3 LEAD CONNECTIONS

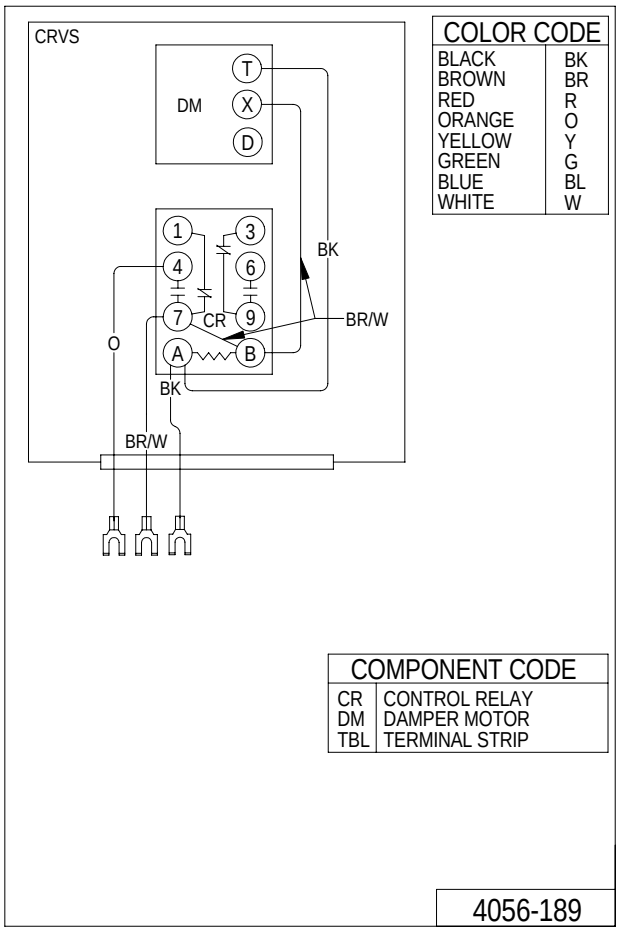

CRVP-3 LEAD CONNECTIONS

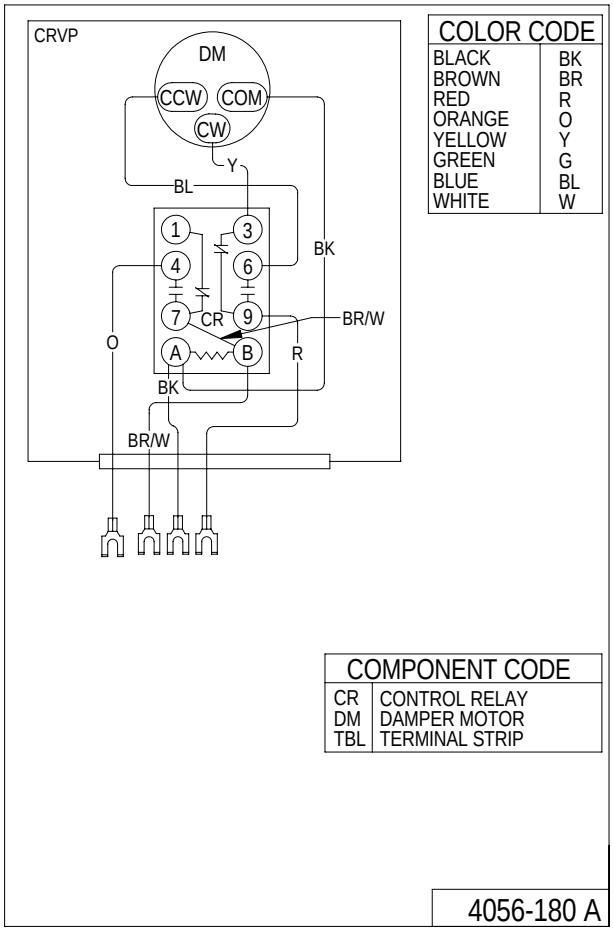

9. Connect leads with fork terminal to corresponding points on unit terminal strip. (See wiring diagram, Figure 5A or 5B, or on ventilator.)
10. Close control panel cover.
11. Replace left filter support, filter and four (4) screws in condenser grille.
12. Reinstall the blower access panel at top of unit and secure with sheet metal screws.
13. Ventilator Checkout
    A. Remove mist eliminator to allow access to minimum position thumbwheel or blade stops.
    B. Resupply power to unit.
    C. Energize the evaporator blower by switching thermostat to the manual fan position with heat/cool in OFF position.
    D. Ventilator should open to the position set by position adjustment thumbwheel on the CRVS, or to the blade stops on the CRVP. On the CRVS, cycle position adjustment thumbwheel to full open through full close. Observe damper blade operation throughout travel to assure free, unobstructed movement. (See Figure 5.)
    E. De-energize evaporator blower. Damper blade should close.
    G. This completes ventilator checkout.
14. Adjust damper blade for required ventilation airflow. (See next section.)
15. Replace mist eliminator. Be sure it is installed with the drain holes to the bottom.
16. Remove blank off plate or barometric fresh air damper installed on service access door. Plug four (4) mounting holes with the plastic plugs provided with the ventilator.
17. Replace service access panel.
18. Ventilator is now ready for operation.

FIGURE 5A

LOW VOLTAGE WIRING AC

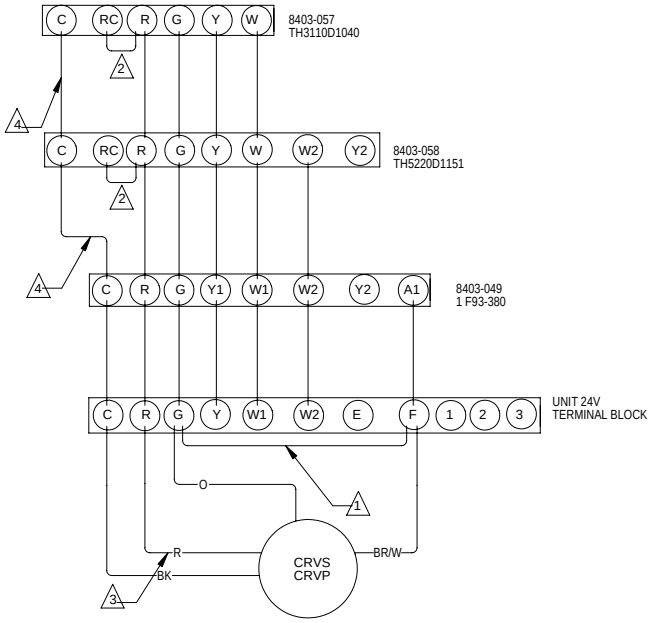

4 WIRE OPTIONAL IF BATTERIES ARE USED IN THE THERMOSTAT.

3 WIRE USED ON CRVP ONLY

2 FACTORY INSTALLED JUMPER

1 REMOVE JUMPER IF THERMOSTAT HAS A1 TERMINAL (OCCUPIED) THIS WILL ALLOW THE BLOWER TO RUN WHEN THE CRV IS RUNNING IN OCCUPIED CONDITIONS.

MIS-2174

FIGURE 5B

LOW VOLTAGE WIRING HP

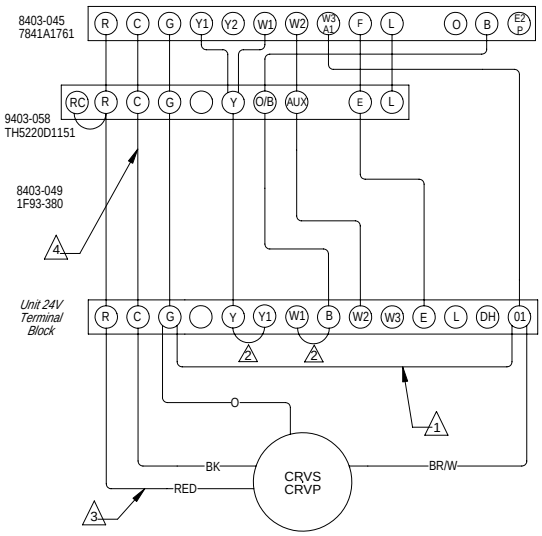

4 WIRE OPTIONAL IF BATTERIES ARE USED IN THE THERMOSTAT.

3 WIRE USED ON CRVP ONLY

2 FACTORY INSTALLED JUMPER

1 REMOVE JUMPER IF THERMOSTAT HAS A1 TERMINAL (OCCUPIED) THIS WILL ALLOW THE BLOWER TO RUN WHEN THE CRV IS RUNNING IN OCCUPIED CONDITIONS.

MIS-2186

FIGURE 6
CRVS-3 POSITION ADJUSTMENT

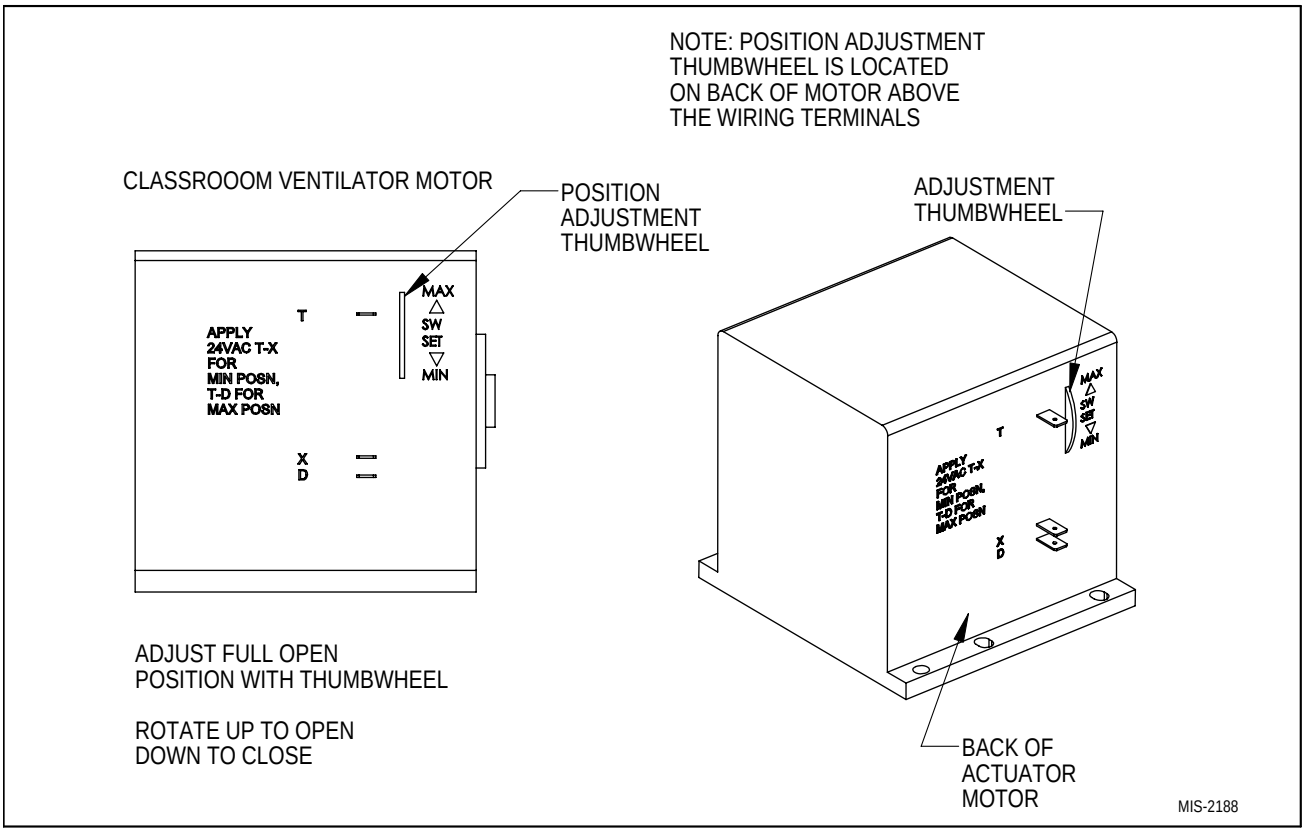

BLADE ADJUSTMENT FOR DESIRED VENTILATOR AIR

The amount of ventilation air supplied by the commercial room ventilator is dependent on five (5) factors.

1. Return air duct static pressure drop.
2. Supply air duct static pressure drop.
3. Indoor blower motor speed.
4. Damper blade open position setting.
5. Tightness or looseness of building envelope.

Determine on what speed the evaporator motor is running.

Refer to the graphs on the following pages to determine the blade setting necessary to achieve the ventilation air required. With the blower energized, use the thumbwheel on the CRVS-3, adjust blade to desired blade position. On the CRVP-3, move the blade stops on the sides of the CRVP to the desired blade position - making sure the stops are parallel side to side.

SH261 & SH311 HIGH SPEED TOTAL AND VENTILATION AIRFLOW

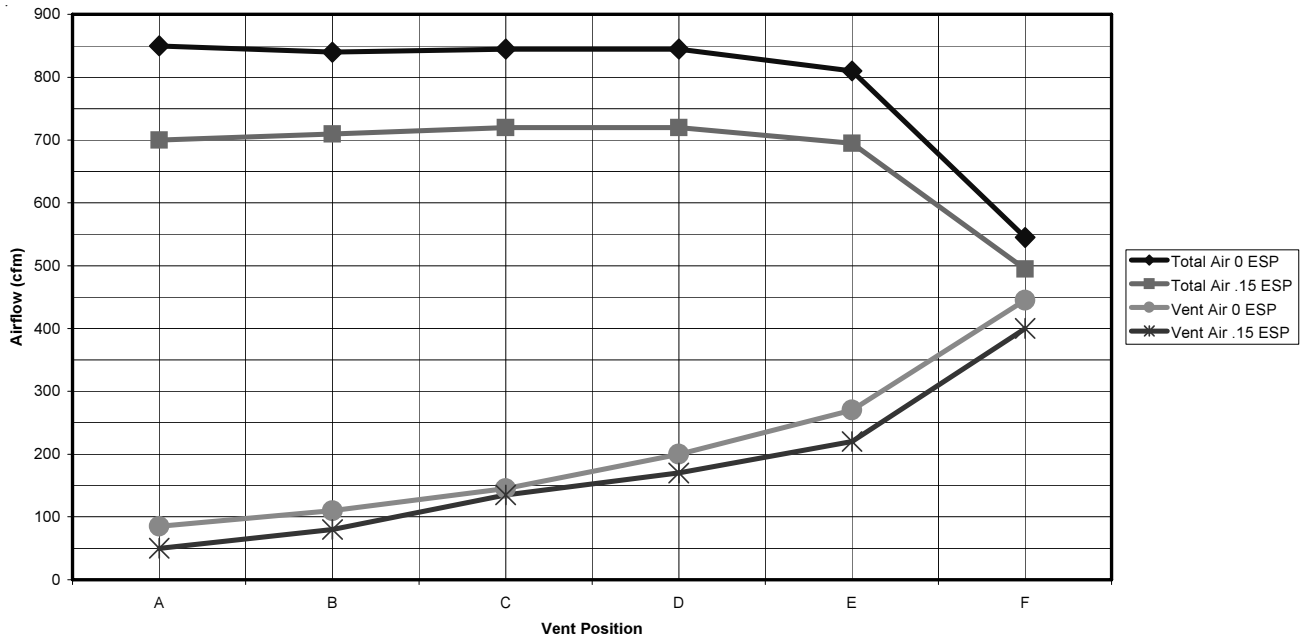

SH261 & SH311 LOW SPEED TOTAL AND VENTILATION AIRFLOW

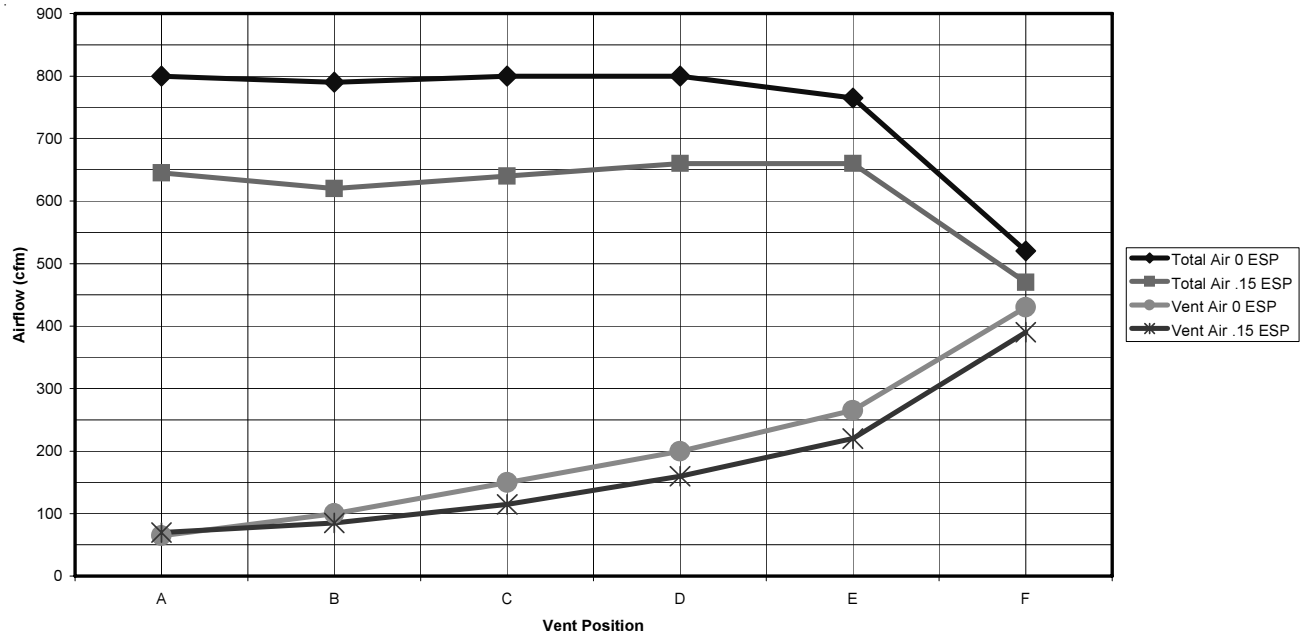

WA/WH30, WA37 & WH36 HIGH SPEED TOTAL AND VENTILATION AIRFLOW

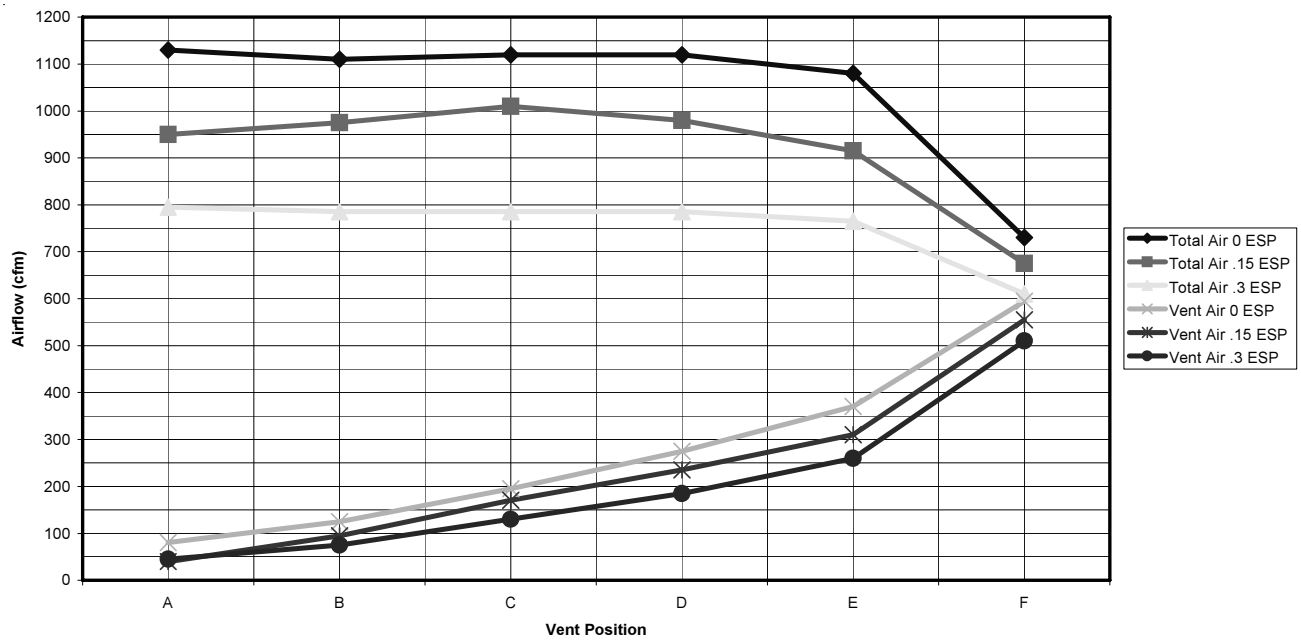

WA/WH30, WA37 & WH36 LOW SPEED TOTAL AND VENTILATION AIRFLOW

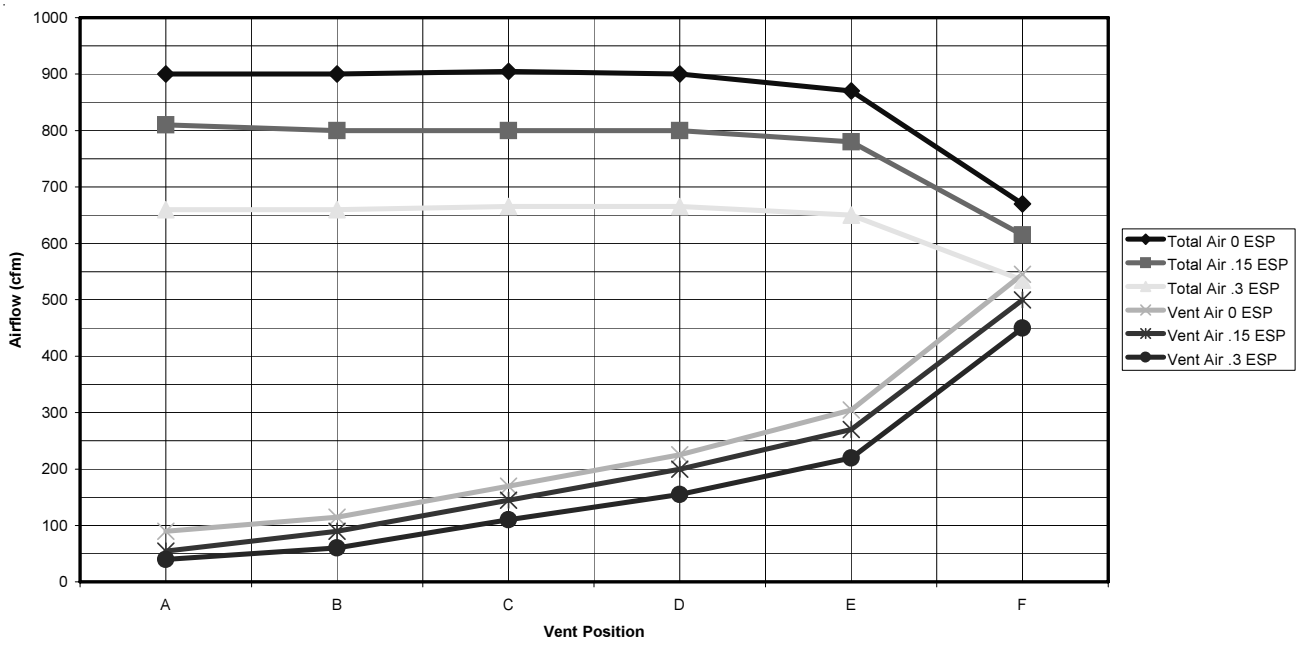

COMMERCIAL ROOM VENTILATOR – WA, WH AND WL SERIES

FEATURES

- One piece construction – easy to install with no mechanical linkage adjustment required.
- Exhaust air damper – built in with positive closed position.
- Actuator motor – 24 volt, power open, spring return with built in torque limiting switch.
- Provides up to 75 percent of outside air.

COMMERCIAL ROOM VENTILATOR SEQUENCE OF OPERATION

On a call for blower operation, CRV opens to position as set by minimum position potentiometer. See Figure 7.

FIGURE 7
CALL FOR BLOWER OPERATION

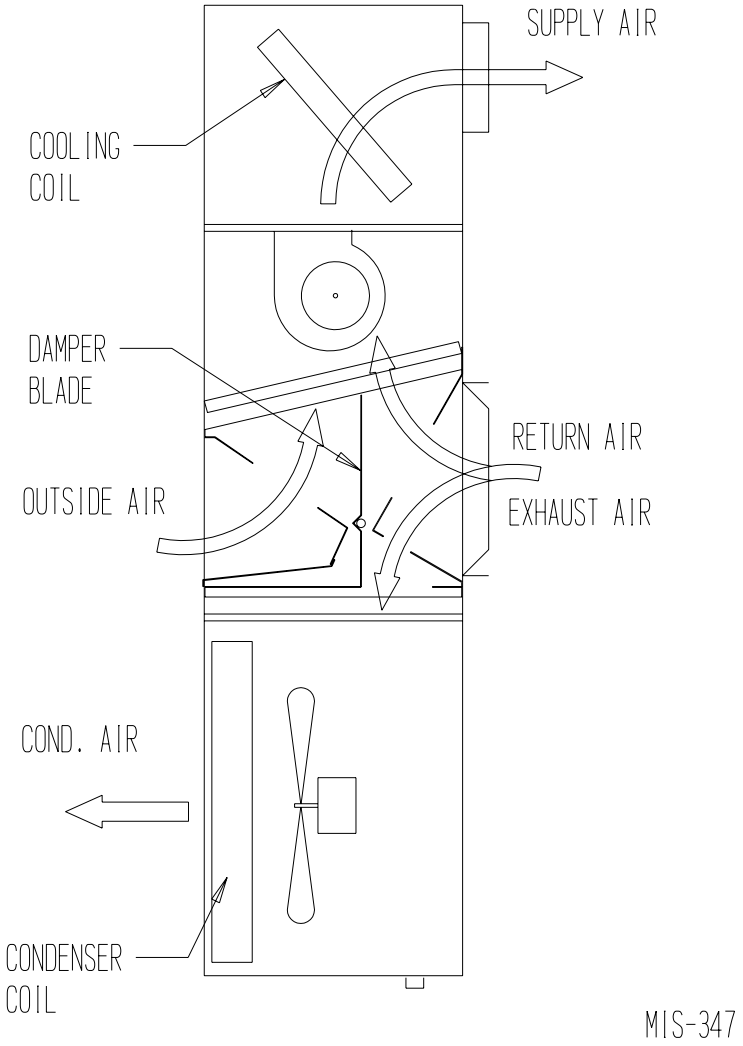

A call for cooling cycles the compressor, and dampers remain in the ventilation mode. On loss of blower operation, CRV closes fully. See Figure 8.
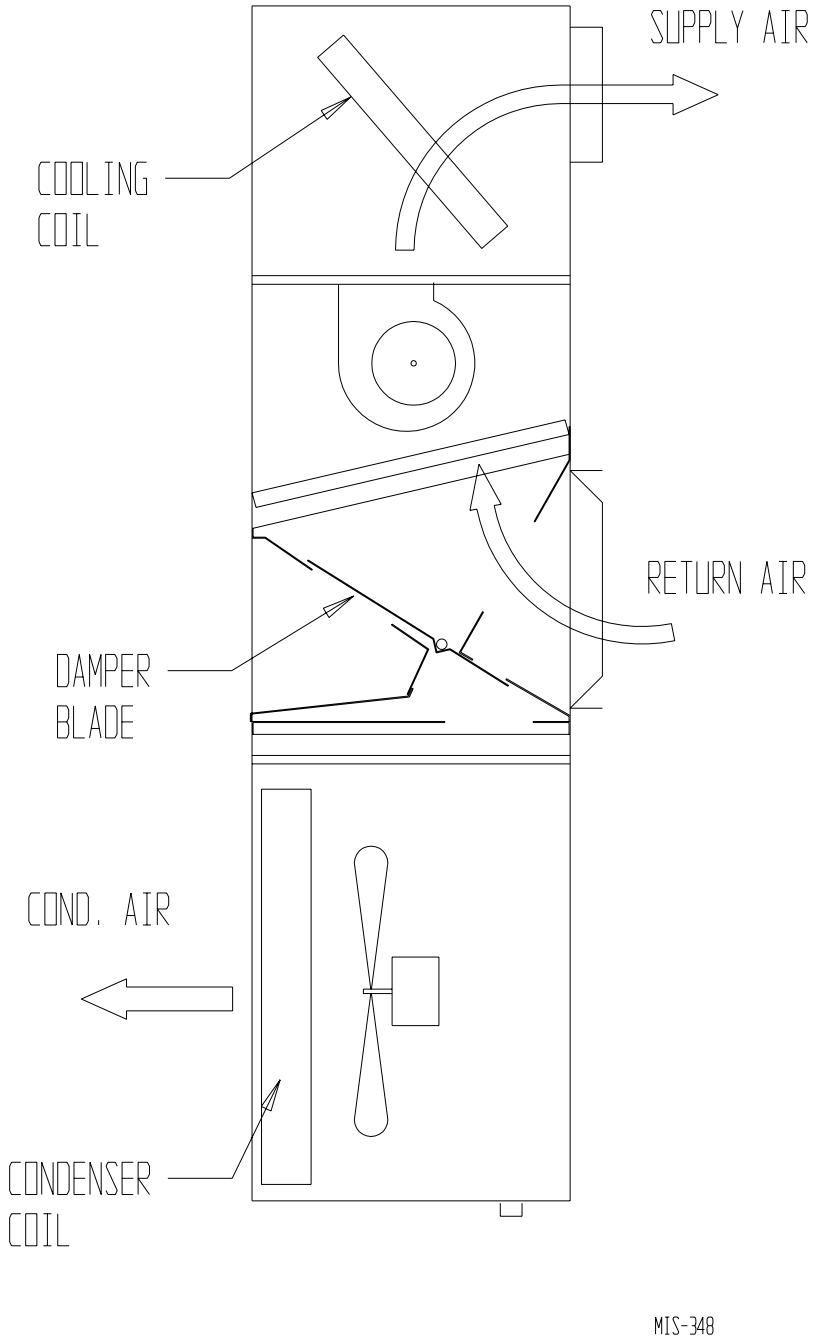
FIGURE 8
CALL FOR COOLING OPERATION